Progressive System

Progressive lubricating systems may operate with oil or grease (viscosity up to NLGI 2) and are indicated for machines that require lubrication with high degree of efficiency and safety.

Its dividers operate under a sequential principle that each point is successively lubricated.
Any impediment in that sequence locks the divider. This stoppage may be detected by a micro switch and transformed into external alarm signal or shut the machine down.

Pumps of Progressive System are available in the versions manual, pneumatic or electrical driving. Controllers / timers, performance indicators and line filters are optional items that may be supplied to complete the System. Progressive Systems may be supplied for intermittent work with single, total use of lubricant or continuous and circulating work.

Flow diagram

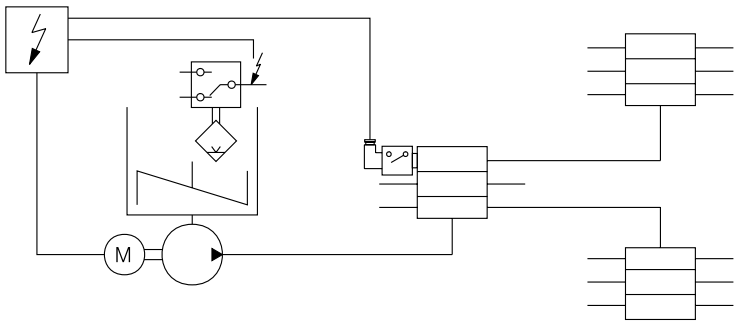

Legend

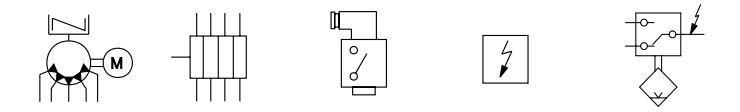

Multiple outlet pump for grease | Progressive Distributors | Electrical cycle indicator | Timer controller | Electrical level indicator

Pneumatic Pump
Model SPE

Description

Pneumatic pump for progressive lubrication systems and for metered oil or soft grease pumping.

This may be supplied with self-driving equipment or may be driven by the lubricated machine itself.

Common application is for medium size new machines as well as for machines already in operation, such as injection presses and mixers.

Specifications

Discharge per cycle	Adjustable from 0,4 up to 2 cm^3
Working pressure	350 kg/cm^2 maximum
Air pressure	From 4 to 7 kg/cm^2
Pressure ratio	50:1
Cycles per minute	Maximum 10
Time interval between cycles	6 seconds
Lubricant	Oil or grease up to NGLI 2
Lubricant reservoir	2 or 3 or 5 liter / 2 or 3 or 5 kg

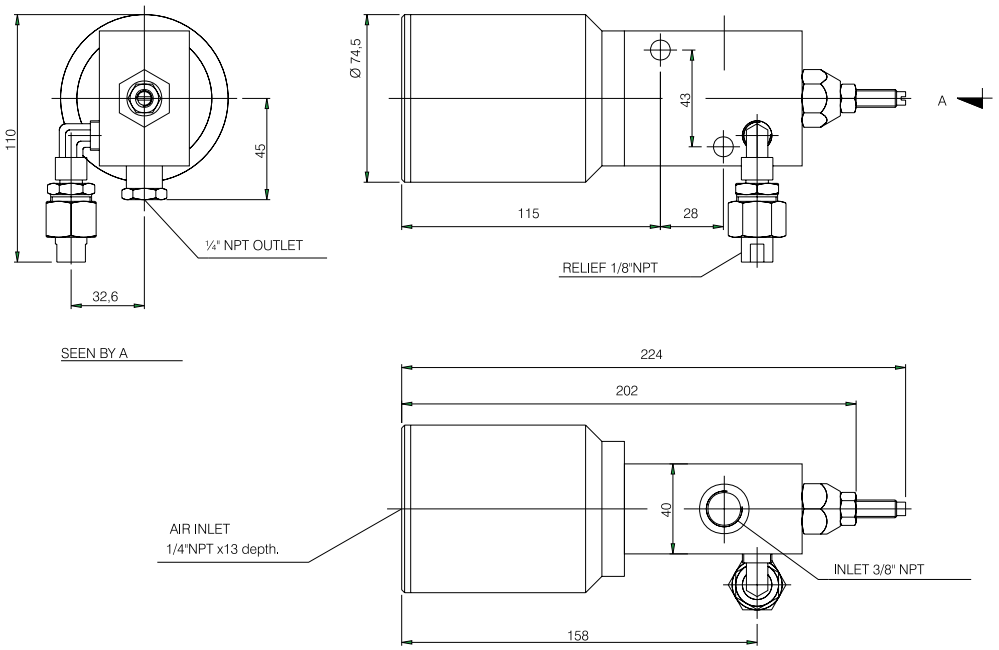

Two and Three and Five-liter Oil Reservoir (Transparent Acrylic Material)

Model DO

Optional:

- Level Switch

1.5 A/ 250 V AC - 200 VDC / 50 W / NO/NC

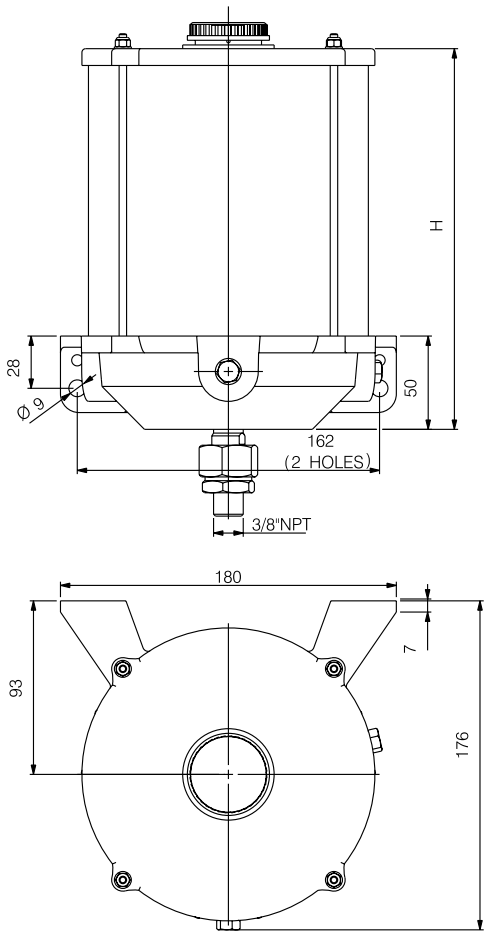

CAPACITY	H
2L	250
3L	310
5L	430

Purchasing codes

Code	Reference	Model	Level Switch NO / NC
2582	DO-16	DO-2	
2583	DO-17	DO-3	
2584	DO-18	DO-5	
10992	DO-19	DO-2	***
10993	DO-20	DO-3	***
10994	DO-21	DO-5	***

Two and Three-kilo Grease Reservoir (Transparent Acrylic Material)

Model DG

Five-kilo grease reservoir (Metallic)

Model DG

Optional:

- Level Switch

1.5 A/ 250 V AC - 200 VDC / 50 W

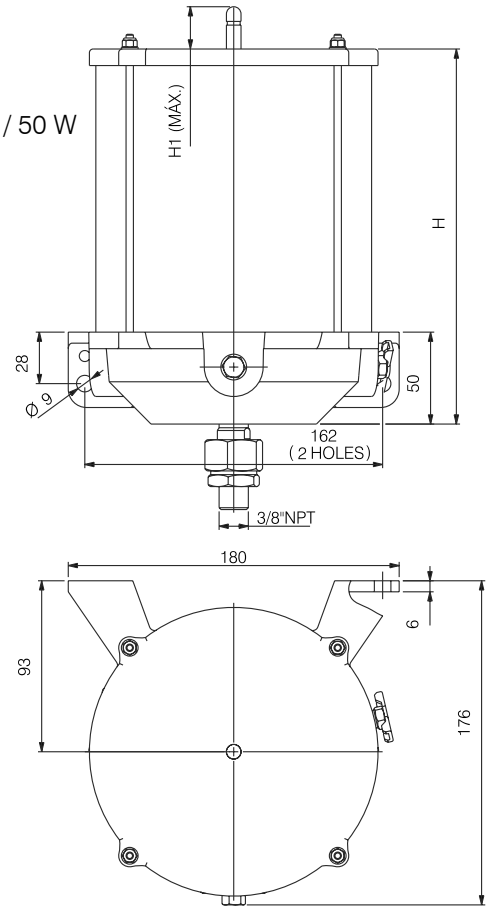

CAPACITY	H	H1	RESERVOIR BODY
2Kg	250	108	ACRYLIC
3Kg	310	155	ACRYLIC
5Kg	430	270	STEEL

Purchasing codes

Code	Reference	Model	Level Switch
2579	DG-32	DG-2	
2580	DG-33	DG-3	
2581	DG-34	DG-5	
10995	DG-35	DG-2	***
10996	DG-36	DG-3	***
10997	DG-37	DG-5	***

Level Switch: Please inform whether NO or NC

Manual Pump for Oil
Model PMO

Description

Manual pump model PMO is indicated for automatic lubrication systems for oil, where progressive dividers are employed.

A pump aluminum housing inside which there is a steel-pumping piston driven by a vertical lever composes the pump. Lubricant reservoir is located at the upper part. It includes cover and refilling strainer.

An adjustable relief valve protects both the pump and its components against casual excess pressure. If lubricant overflows towards relief valve, this means the system is obstructed.

Specifications

Discharge	1 cm^3/cycle
Working pressure	150 kg/cm^2 (2,130 psi)
Reservoir	0,3 liter or 1,4 liter (metallic)
Lubricant	Oil 50-1000 cSt
Temperature	From -10 ºC to +60 ºC
Outlet fitting	M12x1 tube Ø 6-8
Mounting	Vertical

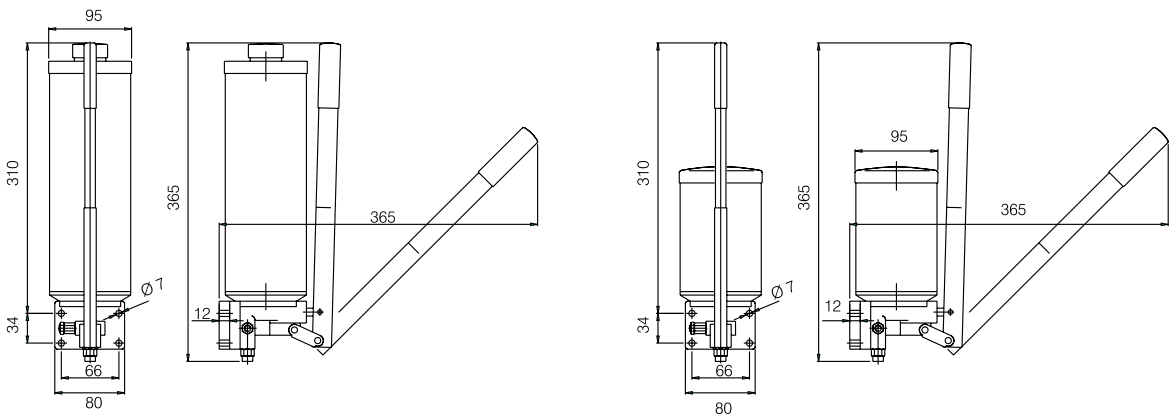

Purchasing codes

Code	Reference	Model	Reservoir	Capacity
5123	00.133.0	PMO - 3 Metallic	0,3 kg	
5124	00.134.0	PMO - 10	Metallic	1,4 kg

Electrical Pump for Oil Model BEO - 2 / 3 / 5

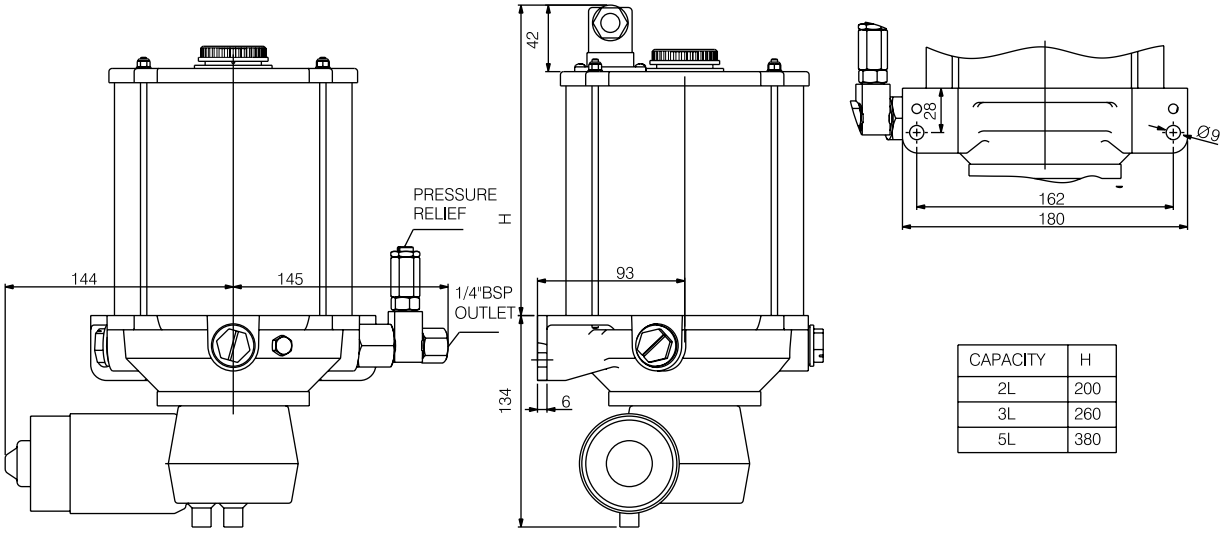

CAPACITY	H
2L	200
3L	260
5L	380

Specifications

Number of pumping elements	From 1 to 3
Discharge /Cycle with fixed pumping elements	0,11 cm^3
Discharge/cycle with adjustable pumping elements	0,01 - 0,11 cm^3
Number of turns per minute	45
Motor	24 V DC - 30 W - 1,5 A 12 V DC - 40 W - 3 A
Capacity of reservoir	2 / 3 / 5 liters (Acrylic)
Maximum Working pressure	250 kg/cm^2 (3630 psi)
Lubricant	Oil 50-1500 cSt at 480 ^oC
Temperature	From -20 ^oC to +80 ^oC
Outlet fitting	1/4" BSP

Optional:

- Minimum level electrical switch

1.5 A/ 250 V AC - 200 VDC / 50 W / NO/NC

(Continue)

Electrical Pump for Oil Model BEO - 2 / 3 / 5

(Continued)

Purchasing codes for BEO - 2

Code	Reference	Model	Fixed flow	Adjustable flow	Minimum Level Switch	Voltage V DC
3162	BEO-1001	BEO-2	***			12
10107	BEO-1002	BEO-2 R		***		12
3163	BEO-1003	BEO-2	***		***	12
10109	BEO-1004	BEO-2 R		***	***	12
3164	BEO-1005	BEO-2	***			24
10108	BEO-1006	BEO-2 R		***		24
3165	BEO-1007	BEO-2	***		***	24
10112	BEO-1008	BEO-2 R		***	***	24

Purchasing codes for BEO - 3

Code	Reference	Model	Fixed flow	Adjustable flow	Minimum Level Switch	Voltage V DC
11096	BEO-1017	BEO-3	***			12
11097	BEO-1018	BEO-3 R		***		12
11098	BEO-1019	BEO-3	***		***	12
11099	BEO-1020	BEO-3 R		***	***	12
11100	BEO-1021	BEO-3	***			24
11101	BEO-1022	BEO-3 R		***		24
11102	BEO-1023	BEO-3	***		***	24
11103	BEO-1024	BEO-3 R		***	***	24

Purchasing codes for BEO - 5

Code	Reference	Model	Fixed flow	Adjustable flow	Minimum Level Switch	Voltage V DC
11104	BEO-1025	BEO-5	***			12
11105	BEO-1026	BEO-5 R		***		12
11106	BEO-1027	BEO-5	***		***	12
11107	BEO-1028	BEO-5 R		***	***	12
11108	BEO-1029	BEO-5	***			24
11109	BEO-1030	BEO-5 R		***		24
11110	BEO-1031	BEO-5	***		***	24
11111	BEO-1032	BEO-5 R		***	***	24

SONED®

CENTRALIZED LUBRICATION

Electrical Pump for Oil
Model PEO-2 - 2N

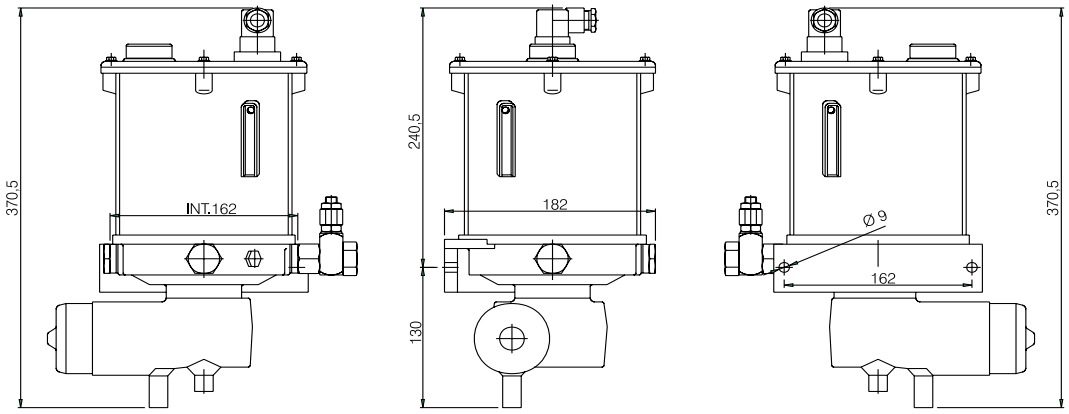

Specifications

Number of pumping elements	From 1 to 3
Discharge /Cycle with fixed pumping elements	0,16 cm^3
Discharge/cycle with adjustable pumping elements	0,01 - 0,16 cm^3
Number of turns per minute	15
Motor	24 V DC - 30 W - 1,5 A 12 V DC - 40 W - 3 A
Electrical minimum level	1,5A 250V AC - 200 V DC 50 W
Capacity of reservoir	2 liters
Working pressure	250 kg/cm^2 (3630 psi) maximum
Lubricant	Oil 50-1500 cSt
Temperature	From -20 ^oC to +80 ^oC
Outlet fitting	1/4" BSP

Purchasing codes

Code	Reference	Type	Fixed flow	Adjustable flow	Voltage
5130	00.916.1	PEO-2	***		12 V DC
5131	00.908.1	PEO-2 R		***	12 V DC
5129	00.916.0	PEO-2	***		24 V DC
5549	00.908.0	PEO-2 R		***	24 V DC

Standard version with single outlet. Other pumping elements may be ordered separately.

Electrical Pump for Oil
Model BEO - 52 / 53 / 55

Reduction rate 1:30

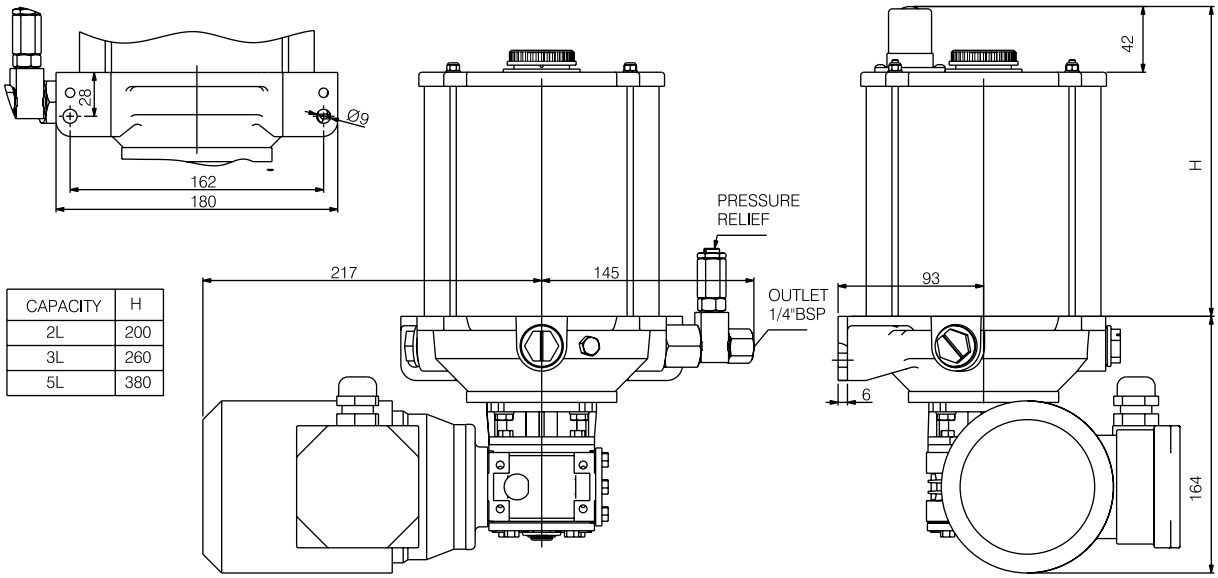

CAPACITY	H
2L	200
3L	260
5L	380

Specifications

Number of pumping elements	From 1 to 3
Discharge/cycle with fixed pumping elements	0,16 cm^3
Discharge/cycle with adjustable pumping elements	0,01 - 0,16 cm^3
Number of turns per minute	50
Three-phase motor	Please refer to Table 1
Electrical minimum level	1,5A 250 V AC - 200 V DC 50 W
Capacity of reservoir	2 / 3 / 5 liters
Working pressure	500 kg/cm^2 (7260 psi) maximum
Lubricant	Oil 50-1500 cSt
Temperature	From -20 ºC to +80 ºC
Outlet fitting	1/4" BSP

Table 1 - Three-phase Motor

Working voltage	220-240/380-420/254-280/440-480 V or 110/220 V single phase
Frequency	50/60 Hz
Electrical current	0.6 - 0.35 A
Power	90 W
Protection	IP - 55
Service	Continuous S1
Insulation	Class F
Constructive layout	B14
Type	MEC - 56

(Continue)

Electrical Pump for Oil
Model BEO - 52 / 53 / 55

Reduction rate 1:30

(Continued)

Purchasing codes for BEO - 52

Code	Reference	Model	Fixed flow	Adjustable flow	Minimum Level Switch	Voltage VDC
10113	BEO-1009	BEO-52	***			110/220
10587	BEO-1010	BEO-52 R		***		110/220
10588	BEO-1011	BEO-52	***		***	110/220
10983	BEO-1012	BEO-52 R		***	***	110/220
10984	BEO-1013	BEO-52	***			220/380-440
10985	BEO-1014	BEO-52 R		***		220/380-440
10986	BEO-1015	BEO-52	***		***	220/380-440
10987	BEO-1016	BEO-52 R		***	***	220/380-440

Purchasing codes for BEO - 53

Code	Reference	Model	Fixed flow	Adjustable flow	Minimum Level Switch	Voltage VDC
11112	BEO-1033	BEO-53	***			110/220
11113	BEO-1034	BEO-53 R		***		110/220
11114	BEO-1035	BEO-53	***		***	110/220
11115	BEO-1036	BEO-53 R		***	***	110/220
11116	BEO-1037	BEO-53	***			220/380-440
11117	BEO-1038	BEO-53 R		***		220/380-440
11118	BEO-1039	BEO-53	***		***	220/380-440
11119	BEO-1040	BEO-53 R		***	***	220/380-440

Purchasing codes for BEO - 55

Code	Reference	Model	Fixed flow	Adjustable flow	Minimum Level Switch	Voltage VDC
11120	BEO-1041	BEO-55	***			110/220
11121	BEO-1042	BEO-55 R		***		110/220
11122	BEO-1043	BEO-55	***		***	110/220
11123	BEO-1044	BEO-55 R		***	***	110/220
11124	BEO-1045	BEO-55	***			220/380-440
11125	BEO-1046	BEO-55 R		***		220/380-440
11126	BEO-1047	BEO-55	***		***	220/380-440
11127	BEO-1048	BEO-55 R		***	***	220/380-440

SONED®

CENTRALIZED LUBRICATION

Electrical Pump for Oil
Model PEO - 52 N

Specifications

Number of pumping elements	From 1 to 3
Discharge/cycle with fixed pumping elements	0,16 cm^3
Discharge/cycle with adjustable pumping elements	0,01 - 0,16 cm^3
Number of turns per minute	15
Three-phase motor	Please refer to Table 1
Electrical minimum level	1,5A 250 V AC - 200 V DC 50 W
Capacity of reservoir	2 liters
Working pressure	500 kg/cm^2 (7260 psi) maximum
Lubricant	Oil 50-1500 cSt
Temperature	From -20 ºC to +80 ºC
Outlet fitting	1/4" BSP

Table 1 - Three-phase Motor

Working voltage	220-240/380-420/254-280/440-480 V
Frequency	50/60 Hz
Electrical current	0.6 - 0.35 A
Power	90 W
Protection	IP - 55
Service	Continuous S1
Insulation	Class F
Constructive layout	B14
Type	MEC - 56

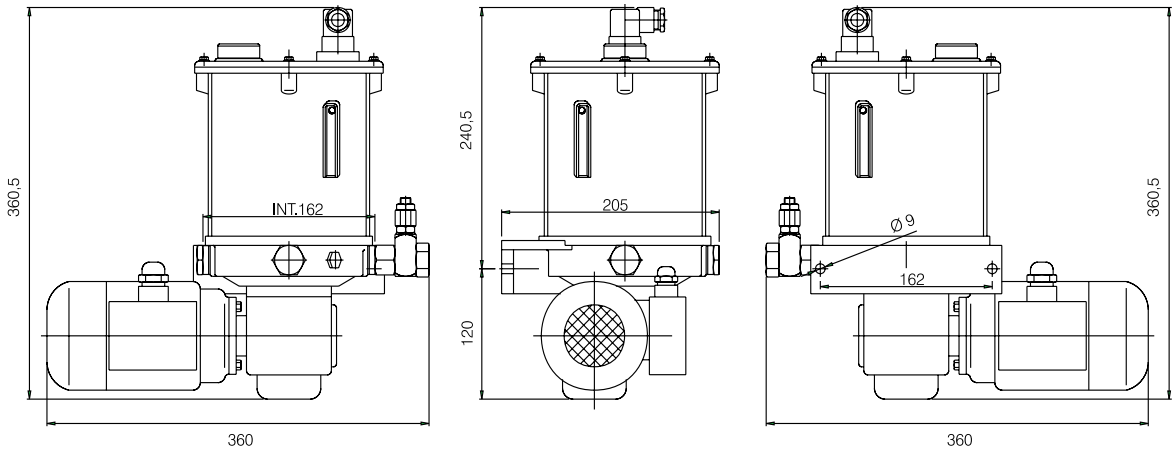

Purchasing codes

Code	Reference	Type	Fixed Flow	Adjustable Flow	Reduction	Cycles 50 Hz	Cycles 60 Hz
5132	90.896.0	PEO-52/30	***		1:30	46	55
5131	90.909.0	PEO-52/30R		***	1:30	46	55

Standard version with single outlet. Other pumping elements may be ordered separately.

SONED®

CENTRALIZED LUBRICATION

Electrical Pump for Oil
Model PEO - 5 N

Specifications

Number of pumping elements	From 1 to 3
Discharge/cycle with fixed pumping elements	0,16 cm^3
Discharge/cycle with adjustable pumping elements	0,01 - 0,16 cm^3
Three-phase motor	Please refer to Table 1
Electrical minimum level	1,5A 250 V AC - 200 V DC 50 W
Capacity of reservoir	5 liters
Working pressure	500 kg/cm^2 (7260 psi) maximum
Lubricant	Oil 50-1500 cSt
Temperature	From -20 ^oC to +80 ^oC
Outlet fitting	1/4" BSP

Table 1 - Three-phase Motor

Working voltage	220-240/380-420/254-280/440-480 V
Frequency	50/60 Hz
Electrical current	0,6 - 0,35 A
Power	90 W
Protection	IP - 55
Service	Continuous S1
Insulation	Class F
Constructive layout	B14
Type	MEC - 56

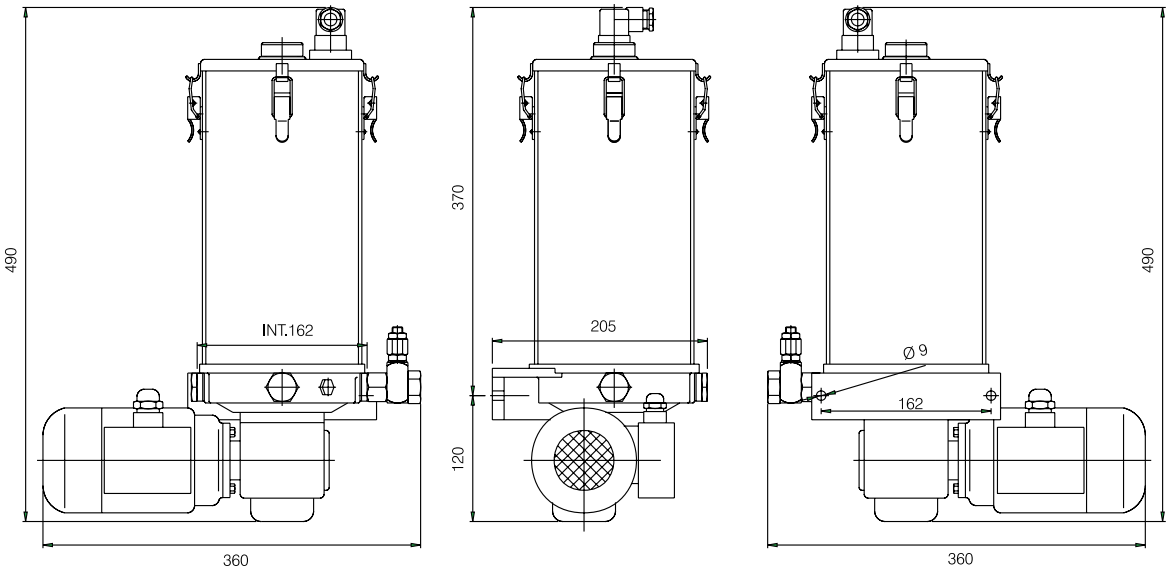

Purchasing codes

Code	Reference	Type	Fixed Flow	Adjustable flow	Reduction	Frequency 50 Hz	Frequency 60 Hz
11088	00.892.0	PEO-5/30	***		1:30	46	55
11089	00.905.0	PEO-5/30		***	1:30	46	55

Standard version with single outlet. Other pumping elements may be ordered separately

SONED®

CENTRALIZED LUBRICATION

Electrical Pump for Oil
Model PEO - 025 N

Specifications

Number of pumping elements	From 1 to 3
Discharge/cycle with fixed pumping elements	0,16 cm^3
Discharge/cycle with adjustable pumping elements	0,01 - 0,16 cm^3
Number of turns per minute	15
Motor	24 V DC - 30 W - 1,5 A 12 V DC - 40 W - 3 A
Electrical minimum level	1,5 A 250 V AC - 200 V DC 50 W
Capacity of reservoir	5 liters
Working pressure	250 kg/cm^2 (3630 psi) maximum
Lubricant	Oil 50-1500 cSt
Temperature	From -20 ºC to +80 ºC
Outlet fitting	1/4" BSP

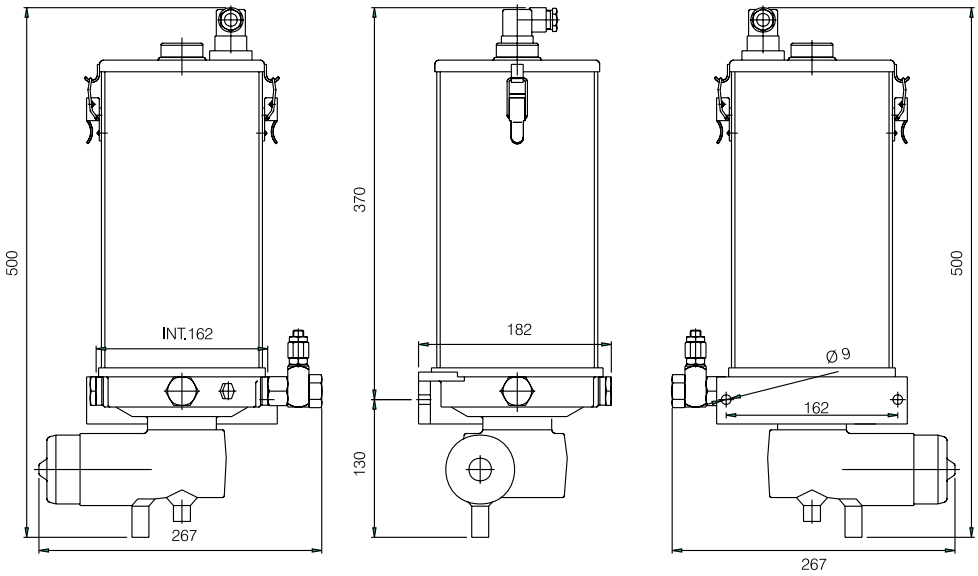

Purchasing codes

Code	Reference	Type	Fixed Flow	Variable flow	Voltage
11090	00.925.3	PEO-025	***		12 V DC
11091	00.926.3	PEO-025 R		***	12 V DC
11092	00.925.0	PEO-025	***		24 V DC
11093	00.926.0	PEO-025 R		***	24 V DC

Standard version with single outlet. Other pumping elements may be ordered separately

SONED®

CENTRALIZED LUBRICATION

Electric Pump for Oil
Model PEO - 10 N

Specifications

Number of pumping elements	From 1 to 3
Discharge/cycle with fixed pumping elements	0,16 cm^3
Discharge/cycle with adjustable pumping elements	0,01 - 0,16 cm^3
Three-phase motor	Please refer to Table 1
Electrical minimum level	1,5 A 250 V AC - 200 V DC 50 W
Capacity of reservoir	10 liters
Working pressure	500 kg/cm^2 (7260 psi) maximum
Lubricant	Oil 50-1500 cSt
Temperature	From -20 ºC to +80 ºC
Outlet fitting	1/4" BSP

Table 1 - Three-phase motor

Working voltage	220-240/380-420/254-280/440-480 V
Cycles	50/60 Hz
Current	0,6 - 0,35 A
Power	90 W
Protection	IP - 55
Service	Continuous S1
Insulation	Class F
Constructive layout	B14
Type	MEC - 56

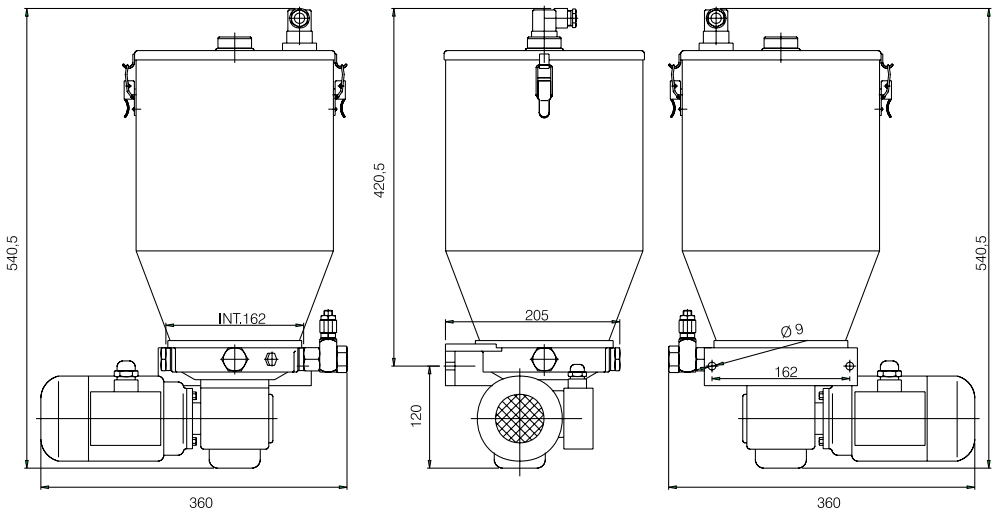

Purchasing codes

Code	Reference	Type	Fixed flow	Variable flow	Reduction	Frequency 50 Hz	Frequency 60 Hz
11094	00.924.0	PEO-10/30	***		1:30	46	55
11095	00.924.3	PEO-10/30R		***	1:30	46	55

Standard version with single outlet. Other pumping elements may be ordered separately.

SONED®

CENTRALIZED LUBRICATION

High Pressure Electrical Pump
Model MPO

Description

MPO electrical pump is indicated for centralized lubrication with oil and with the help of progressive dividers.

That motorized pump is mounted on a metallic plate with orifice. That also serves as cover to the reservoir.

Gear pump is supplied with a set of priming valves and by-pass valves. Those pumps are equiped with minimum oil level electrical switch, pressure gauge and strainer at filler cup. Electrical motor may be supplied with special electrical tension or single-phase 110/220 V. Those pumps operate at maximum working pressure of 120 kg/cm², so that they may be applied in average and large size systems

Specifications

Discharge/minute	500 cm³
Working pressure	50 - 120 kg/cm² adjustable
Reservoir	3,6 liters
Lubricant	Oil 50-1000 cSt
Outlet fitting	M12x1 tube Ø 6 - 8 mm
Motor	Three-phase
Voltage	220/280 V - 380/480 V
Cycles	50/60Hz
Temperature	From -20 ºC to +80 º C
Power	0,18 kW
Protection	IP-55
Service	Continuous S1
Insulation	Class F
Minimum level electrical switch	1,5 A-250 V AC-200 V DC- 50 W

Dimensions

Reservoir	A	B	C	D	E	F
3.6 liters / Plastic	155	181	348	167	170	230

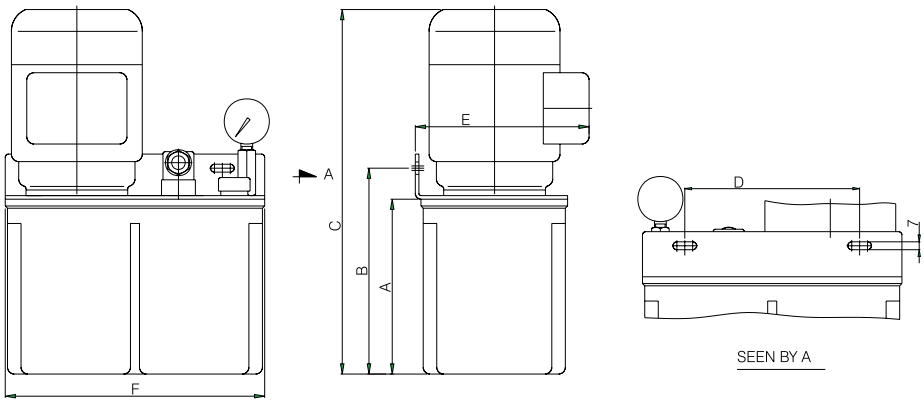

Purchasing codes

Code	Refrence	Type	Reservoir	Capacity	Flow
5127	00.860.2	MPO-3NY500	Plastic	3.6 liters	500 cm³/min

SONED®

CENTRALIZED LUBRICATION

Manual Pump for Grease
Model PMG

Description

PMG manual pump is indicated for automatic lubricating system for grease with the use of progressive dividers.
It is composed by a pump aluminum housing inside which there is a steel pumping piston driven by a vertical lever. Lubricant reservoir is located at the upper part. Model PMG-10 is equipped with follower plate, spring and rod that indicates visual grease level inside reservoir. An adjustable relief valve protects the pump and its components against casual excess pressure. If lubricant overflows towards relief valve, this means that the system is blocked.

Specifications

Discharge	1 cm^3 / cycle
Working pressure	150 kg/cm^2
Reservoir	0,3 or 1,4 kg (metallic)
Lubricant	PMG-3 grease NLGI 0 PMG-10 Grease NLGI 2
Temperature	From -10 ºC to +60 ºC
Outlet fitting	M12x1 tube Ø 6 - 8
Assembling	Vertical

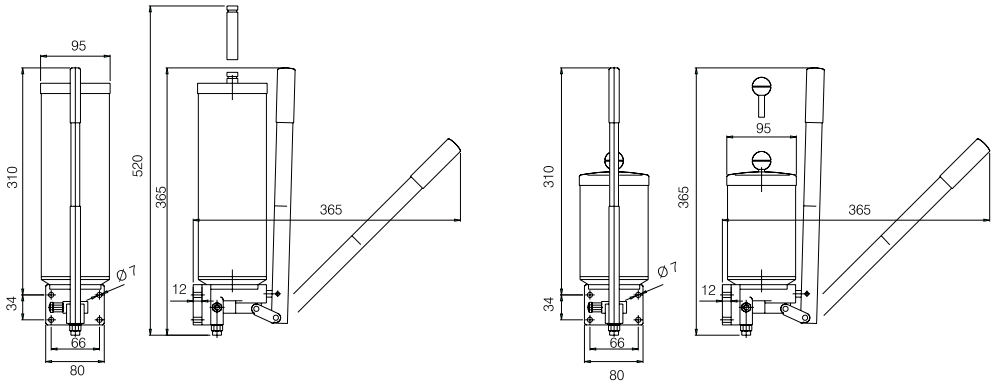

Purchasing codes

Code	Reference	Type	Capacity
5125	00.135.0	PMG-3	0,3 kg
5126	00.132.0	PMG-10	1,4 kg

Electrical Pump for Grease
Model BEG - 2 / 3 / 5

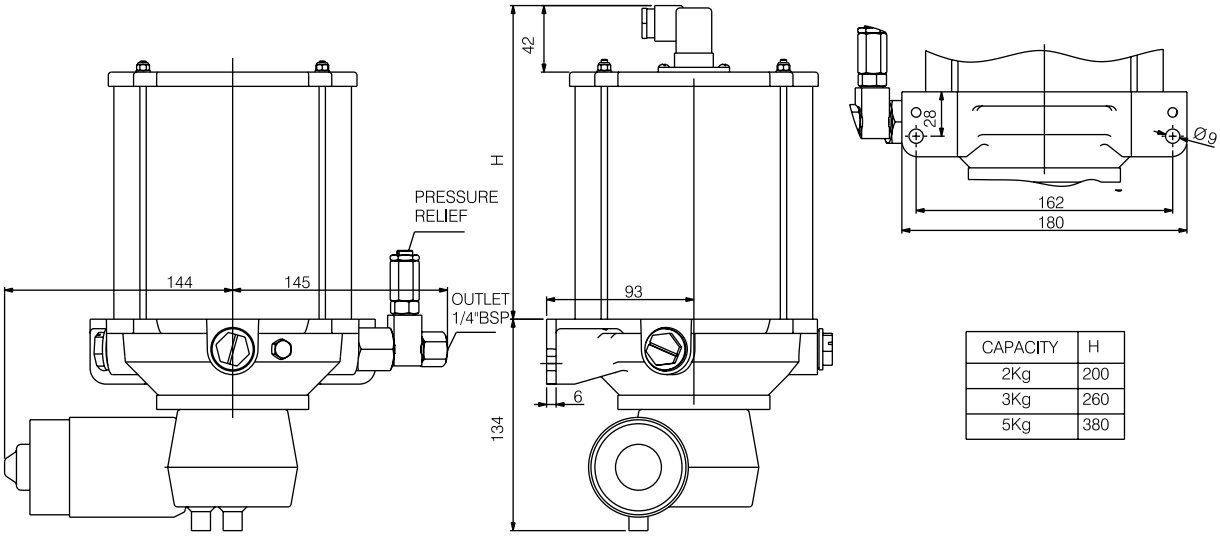

CAPACITY	H
2Kg	200
3Kg	260
5Kg	380

Specifications

Number of pumping elements	From 1 to 3
Discharge/cycle with fixed pumping elements	0,16 cm^3
Discharge/cycle with adjustable pumping elements	0,01 - 0,16 cm^3
Number of cycles per minute	15
Motor	24 V DC - 30 W - 1,5 A 12 V DC - 40 W - 3 A
Minimum level electrical switch	2 A- 230 V AC/DC - 40 W - IP54
Capacity of reservoir	2 / 3 / 5 kg
Working pressure	250 kg/cm^2 (3630 psi) maximum
Lubricant	Soft grease maximum NLGI - 2
Temperature	From -20 ºC to +80 ºC
Outlet fitting	1/4” BSP

Optional:

Minimum Level Electrical Switch: 1,5 A / 250 V A C- 200 VDC 50W
(Please specifify contact: either NO or NC)

Standard version with single outlet. Other pumping elements may be ordered separately.

(Continue)

Electrical Pump for Grease
Model BEG - 2 / 3 / 5

(Continued)

Purchasing codes for BEG - 2

Code	Reference	Model	Fixed Flow	Adjustable Flow	Minimum Level Switch	Voltage VDC
3159	BEG-1001	BEG-2	***			12
10105	BEG-1002	BEG-2 R		***		12
3160	BEG-1003	BEG-2	***		***	12
10976	BEG-1004	BEG-2 R		***	***	12
10977	BEG-1005	BEG-2	***			24
10106	BEG-1006	BEG-2 R		***		24
2611	BEG-1007	BEG-2	***		***	24
3161	BEG-1008	BEG-2 R		***	***	24

Purchasing codes for BEG - 3

Code	Reference	Model	Fixed Flow	Adjustable Flow	Minimum Level Switch	Voltage VDC
11128	BEG-1017	BEG-3	***			12
11129	BEG-1018	BEG-3 R		***		12
11130	BEG-1019	BEG-3	***		***	12
11131	BEG-1020	BEG-3 R		***	***	12
11132	BEG-1021	BEG-3	***			24
11133	BEG-1022	BEG-3 R		***		24
11134	BEG-1023	BEG-3	***		***	24
11135	BEG-1024	BEG-3 R		***	***	24

Purchasing codes for BEG - 5

Code	Reference	Model	Fixed Flow	Adjustable Flow	Minimum Level Switch	Voltage VDC
11136	BEG-1025	BEG-5	***			12
11137	BEG-1026	BEG-5 R		***		12
11138	BEG-1027	BEG-5	***		***	12
11139	BEG-1028	BEG-5 R		***	***	12
11140	BEG-1029	BEG-5	***			24
11142	BEG-1030	BEG-5 R		***		24
11143	BEG-1031	BEG-5	***		***	24
11144	BEG-1032	BEG-5 R		***	***	24

SONED®

CENTRALIZED LUBRICATION

Electrical Pump for Grease
Model PEG-2

Specifications

Number of pumping elements	From 1 to 3
Discharge/cycle with fixed pumping elements	0,16 cm^3
Discharge/cycle with adjustable pumping elements	0,01 - 0,16 cm^3
Number of cycles per minute	15
Motor	24 V DC - 30 W - 1,5 A
	12 V DC - 40 W - 3 A
Minimum level electrical switch	2 A- 230 V AC/DC - 40 W - IP54
Capacity of reservoir	2 kg
Working pressure	250 kg/cm^2 (3630 psi) maximum
Lubricant	Soft grease maximum NLGI - 2
Temperature	From -20 ºC to +80 ºC
Outlet fitting	1/4" BSP

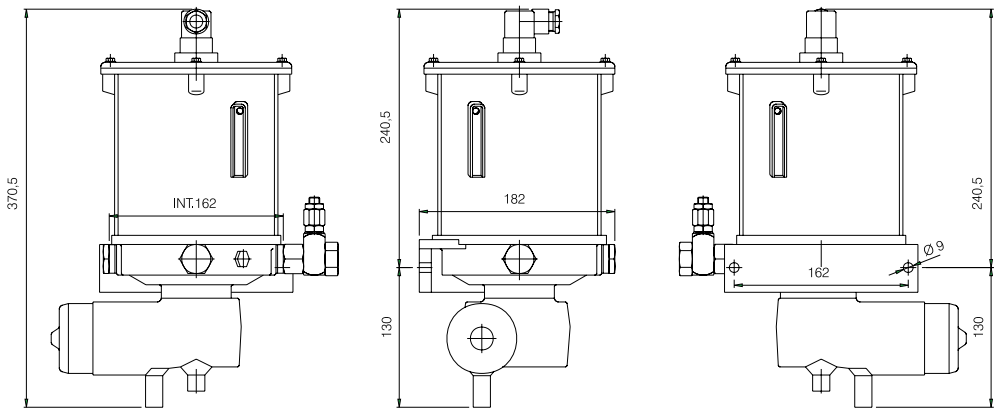

Purchasing codes

Code	Reference	Type	Electric Level	Fixed Flow	Adjustable Flow	Voltage
5137	90.882.1	PEG - 2		***		12 V DC
5138	90.915.1	PEG - 2 LV	***	***		12 V DC
5139	90.902.1	PEG - 2 R			***	12 V DC
5140	90.921.1	PEG - 2 R LV	***		***	12 V DC
5136	90.882.0	PEG - 2		***		24 V DC
5134	90.915.0	PEG - 2 LV	***	***		24 V DC
5141	90.902.0	PEG - 2 R			***	24 V DC
5135	90.921.0	PEG - 2 R LV	***		***	24 V DC

Standard version is supplied with single outlet. Other pumping elements may be ordered separately.

SONED®

CENTRALIZED LUBRICATION

Electrical Pump for Grease
Model PEG - 2N

Specifications

Number of pumping elements	From 1 to 3
Flow / cycle with fixed pumping elements	0.16 cm^3
Flow / cycle with adjustable pumping elements	0.01 - 0.16 cm^3
Number of turns per minute	15
Motor	24 V DC - 30 W - 1,5 A 12 V DC - 40 W - 3 A
Minimum electrical level	2 A - 230 V AC/DC - 40 W-IP54
Reservoir capacity	2 kg
Maximum operating pressure	250 kg/cm^2 (3,630 psi)
Lubricant	Grease max NGLI - 2
Temperature	From -20 ^oC to +80 ^oC
Outlet union	1/4" BSP

Notes

- Standard version is equiped with a single outlet.
- Other pumping elements may be ordered in separate.

Optionals

- Minimum level electrical switch
- Timer

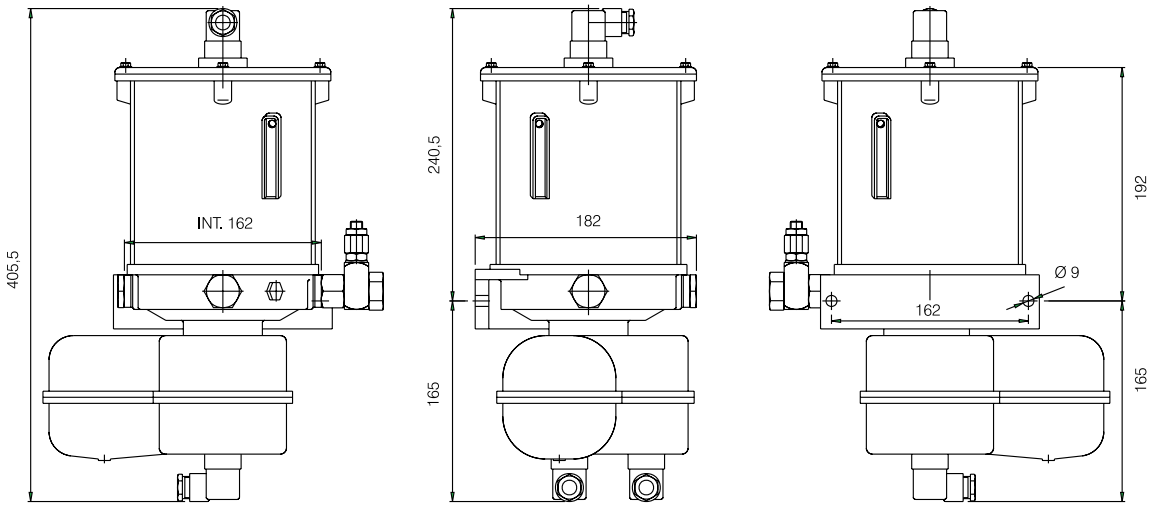

Purchasing codes

Code	Reference	Type	Electric Level	Flow		Timer	Voltage
				Fixed	Adjustable		
5275	90.915.0	PEG - 2 N	***	***			24 VDC
5274	90.915.0T	PEG - 2 N	***	***		***	24 VDC
11357	90.882.0T	PEG - 2N		***		***	24 VDC
5135	90.921.0	PEG - 2N	***		***		24 VDC
11438	90.921.OT	PEG - 2N	***		***	***	24 VDC
11439	90.902.OT	PEG - 2N			***	***	24 VDC

Electrical Pump for Grease Model BEG - 52 / 53 / 55

Reduction rate 1:30

Specifications

Number of pumping elements	From 1 to 3
Discharge/cycle with fixed pumping elements	0,16 cm^3
Discharge/cycle with adjustable pumping elements	0,01 - 0,16 cm^3
Number of turns per minute	50
Three-phase motor	Please refer to Table 1
Electrical minimum level (optional)	2 A 230 V AC/DC 40 WIP-54 NO or NC
Capacity of reservoir	2 / 3 / 5 kg (Acrylic)
Working pressure	500 kg/cm^2 (7260 psi) maximum
Lubricant	Grease Maximum NLGI - 2
Temperature	From -20 °C to +80 °C
Outlet fitting	1/4" BSP

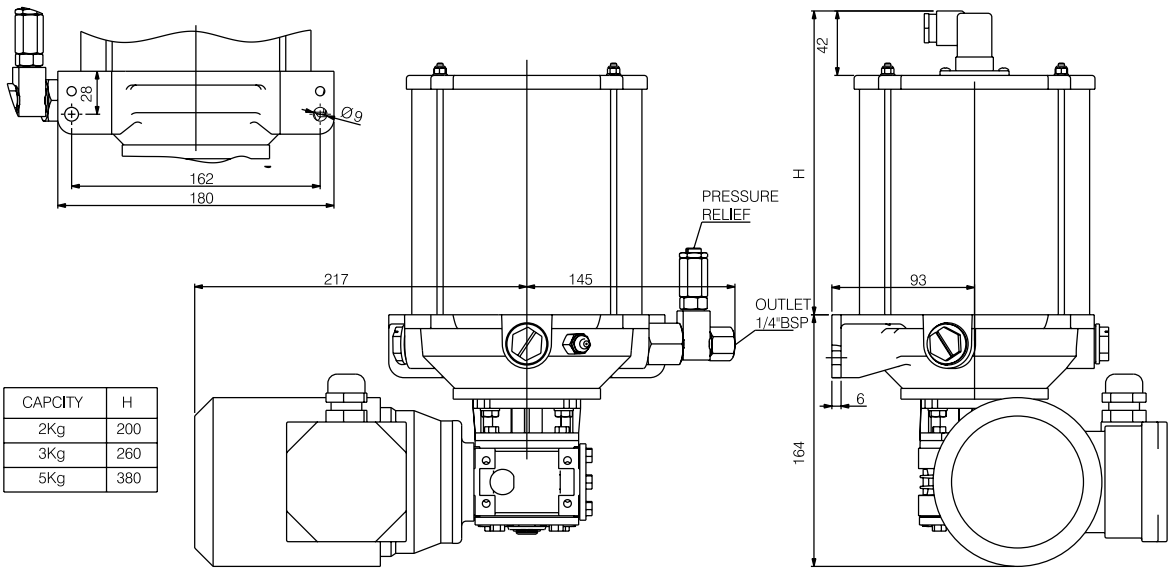

CAPCITY	H
2Kg	200
3Kg	260
5Kg	380

Table 1 - Three-phase Motor

Working voltage	220-240/380-420/254-280/440-480 V or 110/220 V single phase
Frequency	50/60 Hz
Electrical current	0.6 - 0.35 A
Power	90 W
Protection	IP - 55
Service	Continuous S1
Insulation	Class F
Constructive layout	B14
Type	MEC - 56

Level switch: please inform whether NO or NC.

(Continue)

Electrical Pump for Grease Model BEG - 52 / 53 / 55

Reduction rate - 1:30

(Continued)

Purchasing codes for BEG - 52

Code	Reference	Model	Fixed Flow	Adjustable Flow	Minimum Level Switch	Voltage (V)
9896	BEG-1009	BEG-52	***			110/220
9897	BEG-1010	BEG-52 R		***		110/220
10635	BEG-1011	BEG-52	***		***	110/220
10978	BEG-1012	BEG-52 R		***	***	110/220
10979	BEG-1013	BEG-52	***			220/380-440
10980	BEG-1014	BEG-52 R		***		220/380-440
10981	BEG-1015	BEG-52	***		***	220/380-440
10982	BEG-1016	BEG-52 R		***	***	220/380-440

Purchasing codes for BEG - 53

Code	Reference	Model	Fixed Flow	Adjustable Flow	Minimum Level Switch	Voltage (V)
11145	BEG-1033	BEG-53	***			110/220
11146	BEG-1034	BEG-53 R		***		110/220
11147	BEG-1035	BEG-53	***		***	110/220
11148	BEG-1036	BEG-53 R		***	***	110/220
11149	BEG-1037	BEG-53	***			220/380-440
11150	BEG-1038	BEG-53 R		***		220/380-440
11151	BEG-1039	BEG-53	***		***	220/380-440
11152	BEG-1040	BEG-53 R		***	***	220/380-440

Purchasing codes for BEG - 55

Code	Reference	Model	Fixed Flow	Adjustable Flow	Minimum Level Switch	Voltage (V)
11153	BEG-1041	BEG-55	***			110/220
11154	BEG-1042	BEG-55 R		***		110/220
11155	BEG-1043	BEG-55	***		***	110/220
11156	BEG-1044	BEG-55 R		***	***	110/220
11157	BEG-1045	BEG-55	***			220/380-440
11158	BEG-1046	BEG-55 R		***		220/380-440
11159	BEG-1047	BEG-55	***		***	220/380-440
11160	BEG-1048	BEG-55 R		***	***	220/380-440

SONED®

CENTRALIZED LUBRICATION

Electrical Pump for Grease Model PEG-52 N

Specifications

Number of pumping elements	From 1 to 3
Discharge/cycle with fixed pumping elements	0,16 cm^3
Discharge/cycle with adjustable pumping elements	0,01 - 0,16 cm^3
Motor	Please refer to Table 01
Minimum level electrical switch	2 A-230 VAC / DC-40 W-IP54 NO
Capacity of reservoir	2 kg (plastic)
Working pressure	500 kg/cm^2 (7260 psi) maximum
Lubricant	grease maximum NLGI - 2
Temperature	From -20 ºC to +80 ºC
Outlet fitting	1/4" BSP

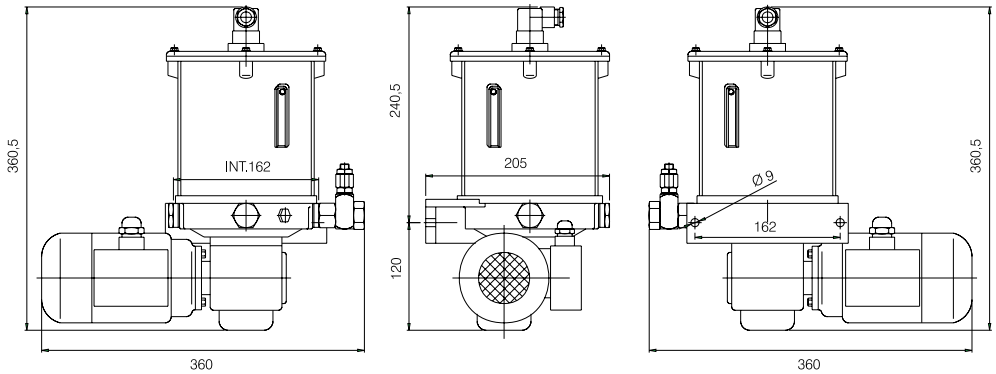

Table 1 - Three-phase motor

Working voltatage	220-240/380-420/254-280/440-480 V
Frequency	50/60 Hz
Electrical current	0,6 - 0,35 A
Power	90 W
Protection	IP - 55
Service	Continuous S1
Insulation	Class F
Constructive layout	B14
Type	MEC - 56

Purchasing codes

Code	Reference	Type	Reduction	Cycles / min		Electric Level	Fixed Flow	Adjustable Flow
				50Hz	60Hz			
5147	90.883.0	PEG-52/30	1-30	46	55		***	
5146	90.911.0	PEG-52/30 LV	1-30	46	55	***	***	
5148	90.903.0	PEG-52/30 R	1-30	46	55			***
5149	90.917.0	PEG-52/30 RLV	1-30	46	55	***		***

Standard version is supplied with single outlet. Other pumping elements may be ordered separately.

Electrical Pump for Grease Model PEG - 5 N

Specifications

Number of pumping elements	From 1 to 3
Discharge/cycle with fixed pumping elements	0,16 cm^3
Discharge/cycle with adjustable pumping elements	0,01 - 0,16 cm^3
Motor	Please refer to Table 01
Minimum level electrical switch	5 A-250 VAC / 30 VDC NO
Capacity of reservoir	5 kg
Working pressure	500 kg/cm^2 (7260 psi) maximum
Lubricant	grease maximum NLGI - 2
Temperature	From -20 ºC to +80 ºC
Outlet fitting	1/4" BSP

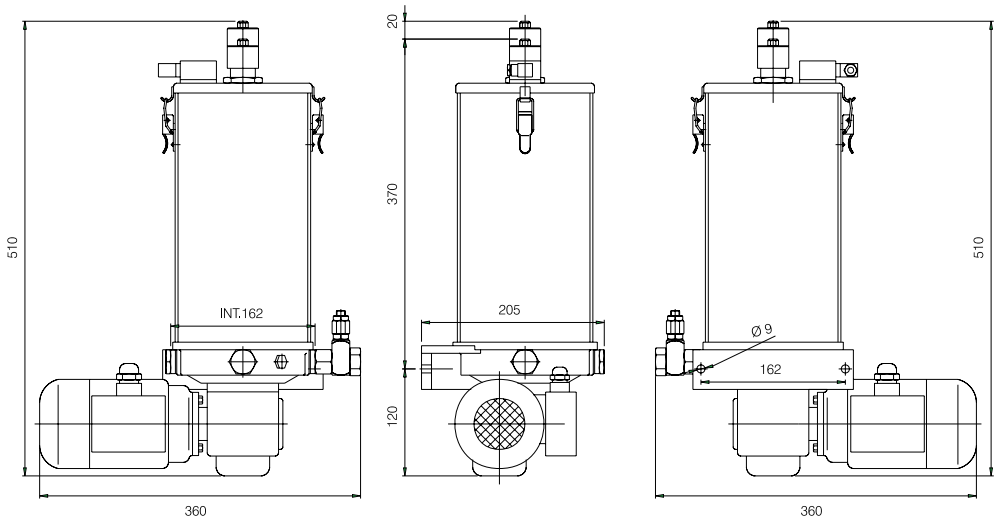

Table 1 - Three-phase motor

Working voltatage	220-240/380-420/254-280/440-480 V
Frequency	50/60 Hz
Electrical current	0,6 - 0,35 A
Power	90 W
Protection	IP - 55
Service	Continuous S1
Insulation	Class F
Constructive layout	B14
Type	MEC - 56

Purchasing codes

Code	Reference	Type	Reduction	Cycles / min		Fixed Flow	Adjustable Flow
				50Hz	60Hz		
10586	90.880.0	PEG-5/30	1-30	46	55	***	
5143	90.898.0	PEG-5/30 R	1-30	46	55		***

Standard version is supplied with single outlet. Other pumping elements may be ordered separately.

Electric Pump for Grease Model PEG - 025 N

Specifications

Number of pumping elements	From 1 to 3
Discharg/cycle with fixed pumping elements	0,16 cm^3
Discharge/cycle with adjustable pumping elements	0,01 - 0,16 cm^3
Number of cycles per minute	15
Motor	24 V DC - 30 W - 1,5 A 12 V DC - 40 W - 3 A
Minimum level electrical switch	5 A - 250 V AC / DC 40 W IP 54
Capacity of reservoir	5 kg
Working pressure	250 kg/cm^2 (3630 psi) maximum
Lubricant	Grease maximum NLGI - 2
Temperature	From -20 ºC to +80 ºC
Outlet fitting	1/4 BSP

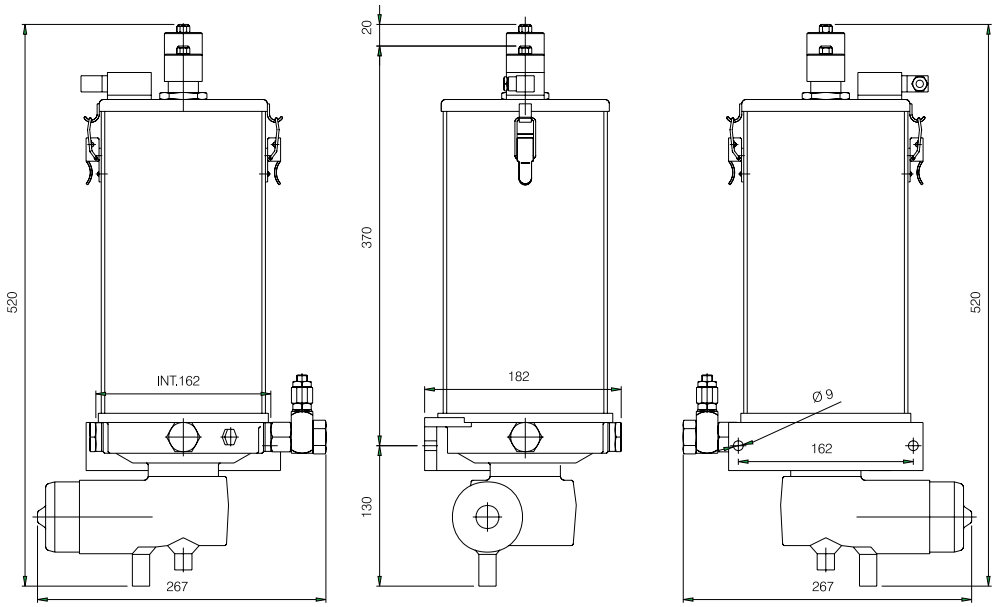

Purchasing codes

Code	Reference	Type	Electric Level	Fixed Flow	Adjustable Flow	Voltage
5151	90.925.2	PEG - 025 LV	***	***		12 V DC
10674	90.926.2	PEG - 025 RLV	***		***	12 V DC
5150	90.925.1	PEG - 025 LV	***	***		24 V DC
10675	90.926.1	PEG - 025 RLV	***		***	24 V DC

Standard version with single outlet. Other pumping elements may be ordered separately.

Electrical Pump for Grease Model PEG - 10N

Specifications

Number of pumping elements	From 1 to 3
Discharge/cycle with fixed elements	0,16 cm^3
Discharge/cycle with adjustable elements	0,01 - 0,16 cm^3
Three-phase motor	Please refer to Table 01
Minimum level electric switch	5 A-230 VAC / DC 40 W IP-54 NO
Capacity of reservoir	10 kg
Working pressure maximum	500 kg/cm^2 (7260 psi)
Lubricant	Grease maximum NLGI - 2
Temperature	From -20 ºC to + 80 ºC
Outlet fitting	1/4" BSP

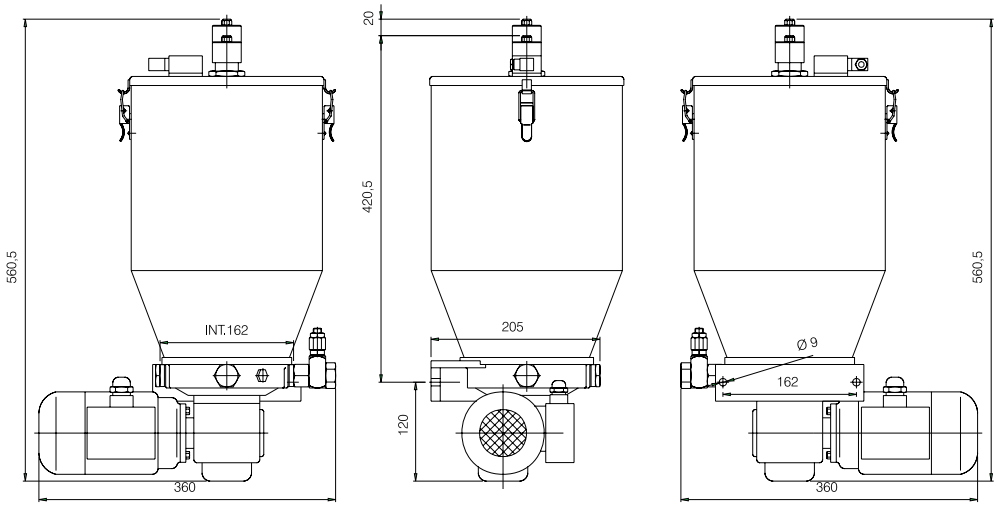

Table 1 - Three-phase motor

Working voltatage	220-240/380-420/254-280/440-480 V
Frequency	50/60 Hz
Electrical current	0,6 - 0,35 A
Power	90 W
Protection	IP - 55
Service	Continuous S1
Insulation	Class F
Constructive layout	B14
Type	MEC - 56

Purchasing codes

Code	Reference	Type	Reduction	Cycles / min		Fixed Flow	Adjustable Flow
				50Hz	60Hz		
5144	90.922.0	PEG-10/30	1-30	46	55	***	
5145	90.923.0	PEG-10/30 R	1-30	46	55		***

Standard version with single outlet. Other pumping elements may be ordered separately.

Accessories for Electrical Pumps PEG / PEO / BEG / BEO

Description

Inserting pumping elements

In order to insert an additional pumping element, it is necessary to remove the closing plug (1) and to fasten the pumping element (2) into pump casing (3). Be careful, so that during assembling operation, piston return spring and guiding ring remain centralized.

For version PEG-2 / PEO-2 / PEG-02 /PEO-025, adjusting tool torque used at closing plug and pumping element may not surpass 35/40 Newton/m^2.

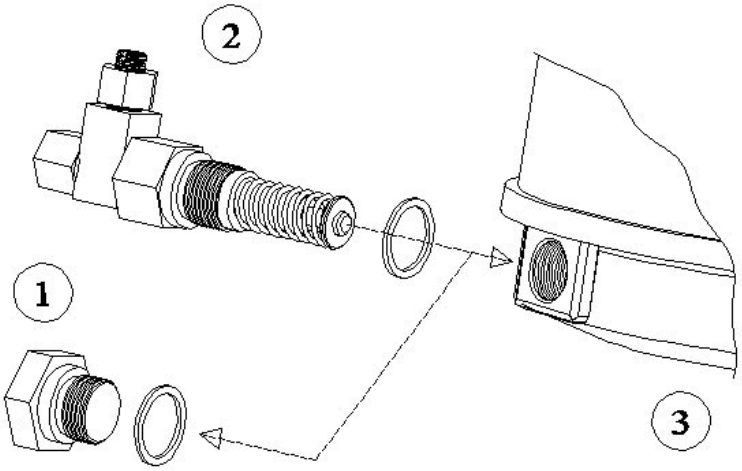

Adjusting maximum pressure valve

Each pumping element incorporates a maximum pressure valve to protect the system against excess. Adjust may be done by releasing lock nut (see position 4) and turning adjusting screw clockwise to increase pressure and counterclockwise to decrease, as required by the system.

Fixed pumping element

Overall features

All electrical pumps model PEG, PEO, BEG and BEO may be equipped with a second and a third pumping element to feed other main pressure lines or to increase flow at same pressure line. All pump elements are equipped with a 360° articulated joint to facilitate installation. Beside it, there is a relief valve to protect the system against excess pressure.

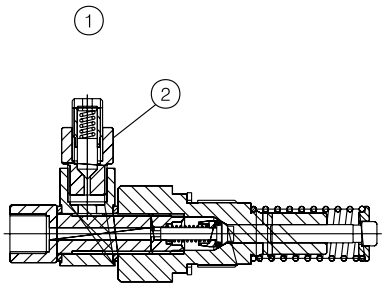

Purchasing codes and spare parts table

Position	Description	Reference	Code
1	Complete pumping element	00.900.1	5152
2	Relief valve	A68.075011	9459

(Continue)

Accessories for Electrical Pumps PEG / PEO / BEG / BEO

(Continued)

Adjustable pumping element

Overall features

All electrical pumps model PEG / PEO / BEG / BEO may be may be equipped with a second and a third pumping element to feed other main pressure lines or to increase flow at same pressure line. All pump elements are equipped with a 360° articulated joint to facilitate installation. Beside it, there is a relief valve to protect the system against excess pressure.

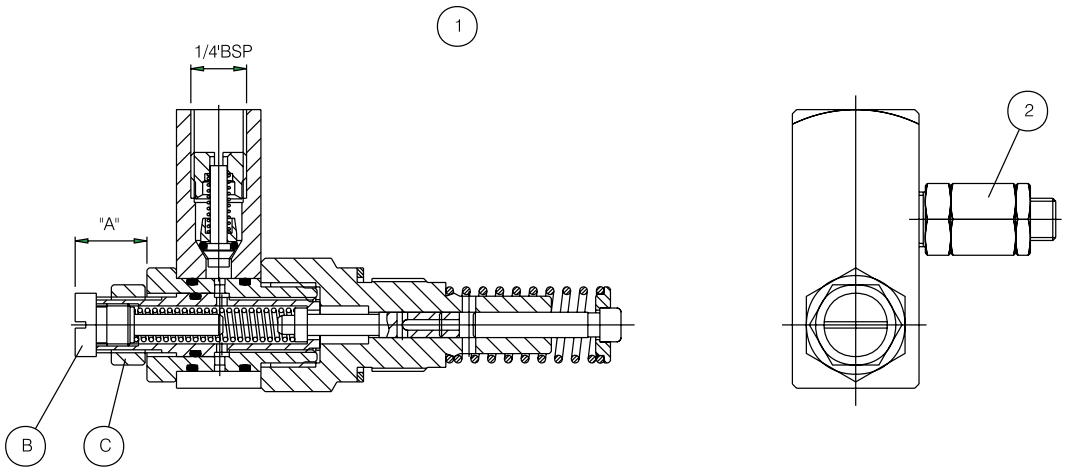

Adjusting

In order to vary nominal pump discharge, it is necessary to loosen locknut (position C) and turn adjusting screw position B) clockwise to reduce and counterclockwise to increase lubricant discharge.

For guiding, please refer to discharge adjusting table that relates discharge/cycle and the distance “A”. When discharge is finally set, it is of paramount importance to fasten locknut again (position C).

Discharge adjusting table

A	Discharge / Cycle	Percentage
23.6	0.16 cm^3	100 %
22.5	0.12 cm^3	75 %
21	0.08 cm^3	50 %
19.5	0.04 cm^3	25 %
18.5	0.01 cm^3	6 %
17.5	0.00 cm^3	0 %

Purchasing codes and spare parts table

Position	Description	Reference	Code
1	Complete pumping element	00.900.3	5153
2	Relief valve	A68.075011	9459

Important:
“A” shall not be large than 23,6 mm

Accessories for Electrical Pumps PEGN / PEON

Complete adjustable pumping element

Overall features

All electrical pumps model PEGN / PEON may be may be equipped with a second and a third pumping element to feed other main pressure lines or to increase flow at same pressure line. All pump elements are equipped with a 360° articulated joint to facilitate installation. Beside it, there is a relief valve to protect the system against excess pressure.

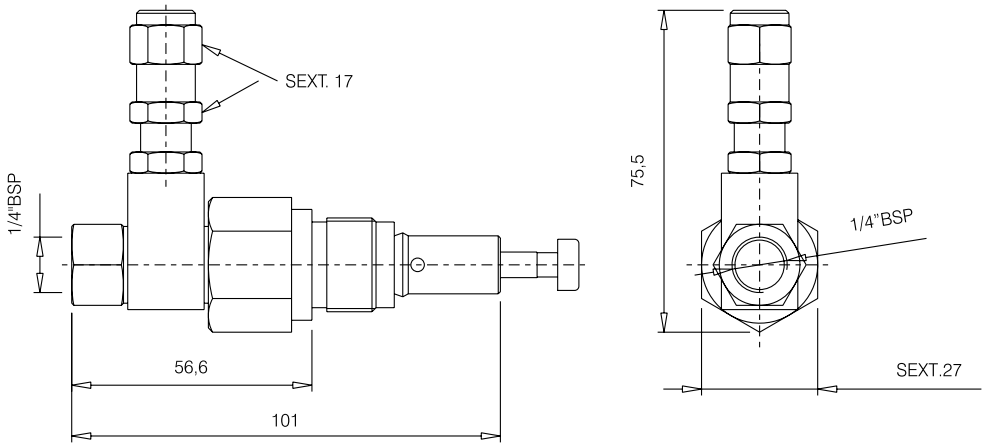

Purchasing code

Code	Reference
10676	90.900.0

(Continue)

Accessories for Electrical Pumps PEGN / PEON

(Continued)

Complete adjustable pumping element

Overall features

All electrical pumps model PEGN / PEON may be may be equipped with a second and a third pumping element to feed other main pressure lines or to increase flow at same pressure line. All pump elements are equipped with a 360° articulated joint to facilitate installation. Beside it, there is a relief valve to protect the system against excess pressure.

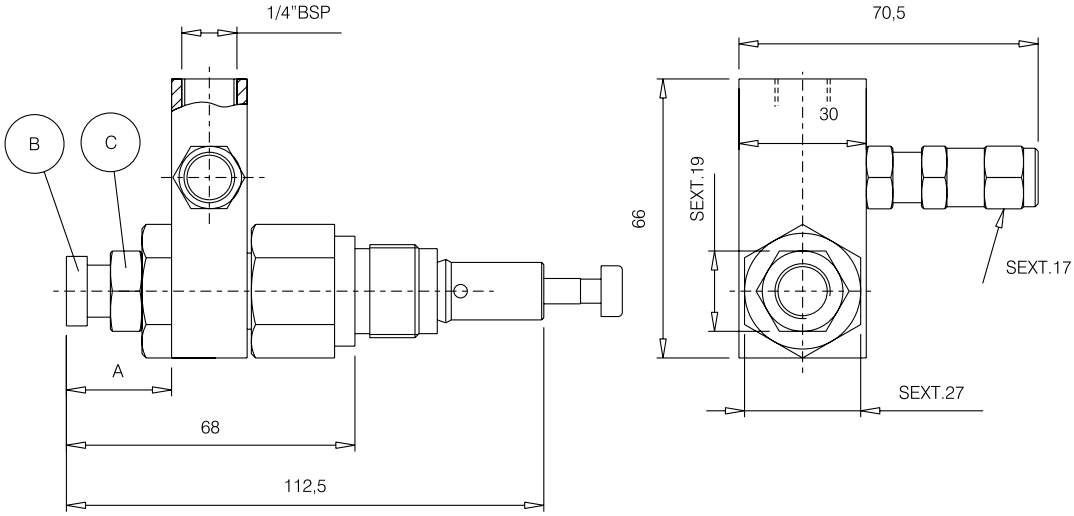

Adjusting

In order to vary nominal pump discharge, it is necessary to loosen locknut (position C) and turn adjusting screw position B) clockwise to reduce and counterclockwise to increase lubricant discharge.

For guiding, please refer to discharge adjusting table that relates discharge/cycle and the distance “A”. When discharge is finally set, it is of paramount importance to fasten locknut again (position C).

Discharge adjusting table

A	Discharge / Cycle	Percentage
23.6	0.16 cm^3	100 %
22.5	0.12 cm^3	75 %
21	0.08 cm^3	50 %
19.5	0.04 cm^3	25 %
18.5	0.01 cm^3	6 %
17.5	0.00 cm^3	0 %

Purchasing code

Code	Reference
10677	90.900.3

Important:
“A” shall not be larger than 23,6 mm.

Progressive Divider

Description

This is the lubricating system that identifies distributing and metering with progressive movement of pistons driven each other in an interdependent sequence. This is obtained by a single lubricant flow.

This system is highly qualified to meter oil and grease for one or more set of points (bearings). Each piston is in series with both backward and forward piston and due to that, malfunctioning of any of them causes stoppage in the sequence and, therefore, inhibiting the system. Such inhibiting also occurs during any external obstruction or when outlet is not being used any longer or may be blocked. The application of a single element holding visual or electrical control is enough for a complete and efficient control of the whole distribution.

In a total loss oil or grease flowing system that operates intermittently, pump flow is determined by the sum and number of cycles of the dividers.

In the circulating system, load quantity during a certain period of time is less rigorous. However, in this case, any excess pressure that is not justified by the pumps and components shall be avoided.

Pump flow is divided according to the quantity, position and discharge at set of dividers employed. By means of a divider called “master”, it is possible to supply other secondary dividers by means of a union of one or several outlets and, from there, to another and so on.

Theoretically, it is possible to succeed. However, due to compressibility reasons of lubricant, it is advisable no to have more than two cascades after master divider as, under that circumstances, this may not properly operate, specially with low penetration index grease and minimum load.

The system counts on two different types of dividers: monoblock model DPM and sectional model DPA.

Main advantages of using Progressive System

- Absolute guarantee in sending pre-established quantity of lubricant.
- Designed for systems where operation must be controlled.
- Absolute safety during operational life by careful selection of high quality material and efficient quality control.
- Possibility to check operation by visual, electrical control.
- Large variety and size combinations resulting so flexible system design.

Progressive Divider

Application of Progressive Dividers

Operational principle

Diagram beside describes the operational system of progressive divider sectional type, model DPA and monobloc type, model DPM.

Black line means lubricant flow under pressure that determines piston movement (identified with letters).

Gray line means lubricant flow sent to discharge ports (identified with number) of divider.

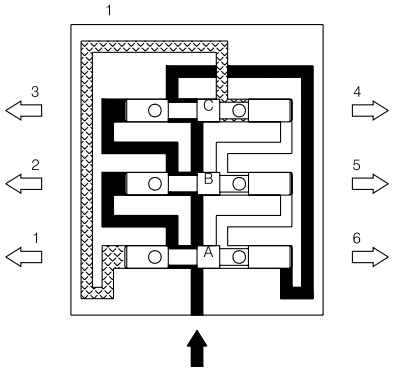

Sequence of operation

1 - Lubricant under pressure moves piston "A" to the left and sends a pre metered flow of lubricant to discharge port number 4.

2 - When piston "A" is displaced to the left side, it opens internal way to direct lubricant under pressure then to move piston "B" which, by its turn, sends a pre metered discharge of lubricant to discharge port number 1.

3 - When piston "B" is displaced to the left side, it opens internal way to direct lubricant under pressure then to move piston "C" which, by its turn, sends a pre metered discharge of lubricant to discharge port number 2.

4 - When piston "C" is displaced to the left side and inverts flow when opening internal way and direct lubricant under pressure to piston "A" (returning to the right, its original position) that sends a pre metered flow of lubricant to discharge port number 3. Continuing the sequence, pistons "B" and "C" will be moved to the right side (returning to its original position) sending pre metered flow of lubricant to discharge ports number 6 and 5. While there is enough lubricant supply under adequate pressure, this sequence shall repeat endlessly.

Note: Interdependency of piston action shows us that, in case of obstruction of lubricant flow at some discharge ports, all the sequence shall be interrupted. So, lubricant supply is interrupted at all discharge ports. On the contrary, if the sequence is fully accomplished, you are assured that all dischage ports have received lubricant. This demonstrates the high reliability degree of progressive dividers.

Black - Lubricant supplied under pressure.

Gray - Lubricant being distributed to the bearings.

White - Static, without pressure.

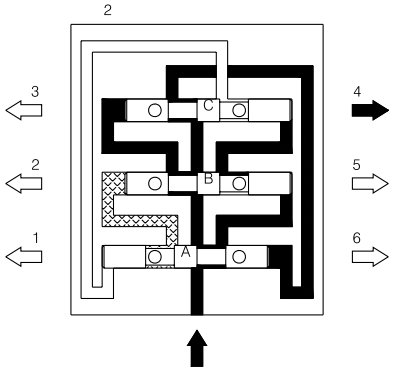

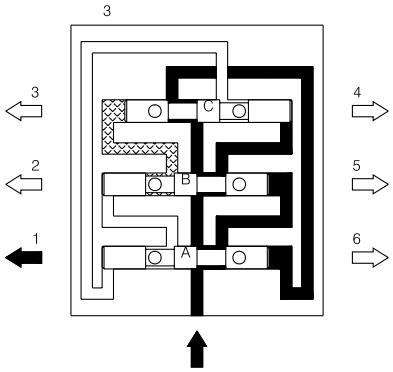

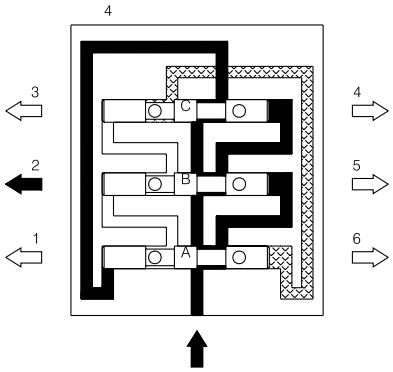

Progressive Divider

Lubricant distributing sequence

Metering pistons of progressive dividers DPM and DPA do not distribute lubricant previously established for corresponding discharge port, but based on a pre-determined sequence of the circuit.

Initial piston distributes lubricant to discharge ports corresponding to the final piston.

Final piston distributes lubricant at discharge ports corresponding to the central piston or, if there is more than one, to the closest intermediate piston correspondent discharge ports.

Intermediate piston distributes lubricant to discharge ports corresponding to the initial piston.

Circuit DPA

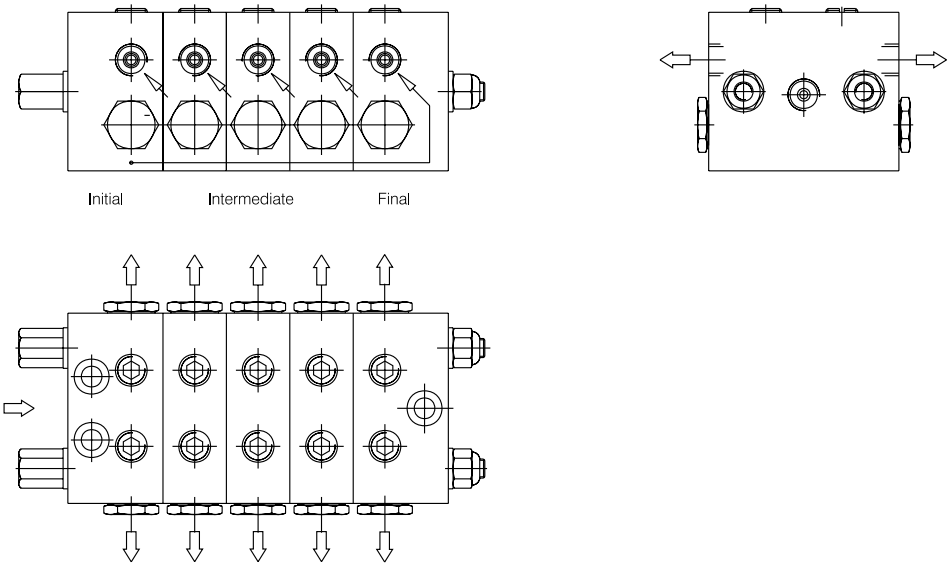

Circuit DPM

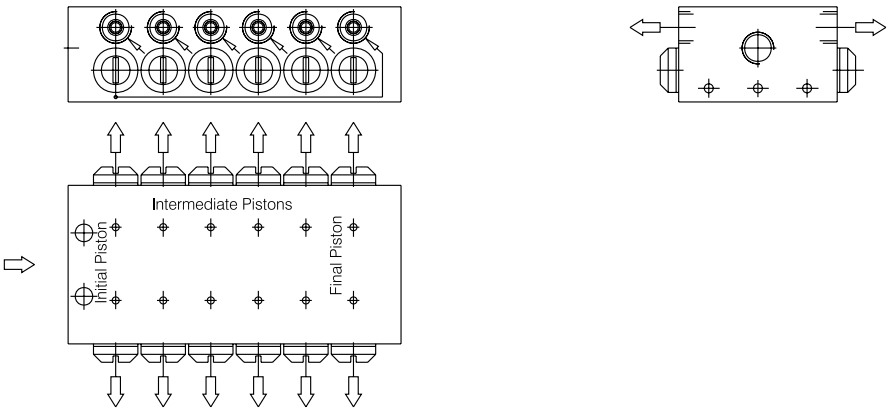

Progressive Divider Model DPA

Specifications

Discharge/cycle (mm^3)	50 - 100 - 150 - 200 - 300 - 400 - 500
Number of metering elements	From 3 to 12
Working pressure	From 15 kg/cm^2 to 300 kg/cm^2
Working temperature	From -20 ºC to +100 ºC
Material	Galvanized carbon steel
Number of cycles/minute	Maximum 300
Inlet fitting	M10x1
Outlet fitting	M10x1
Fastening screws	M6x50 (3)
Lubricant	Oil 15 cSt - grease maximum NLGI 2
Controlling elements	Visual and electrical for signalizing cycle and excess pressure
Main pressure lines	Tube ø 10-8-6 mm
Secondary lines	Tube ø 8-6-4 mm

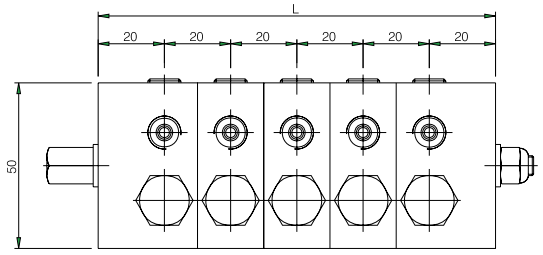

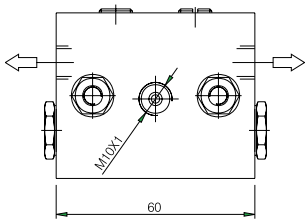

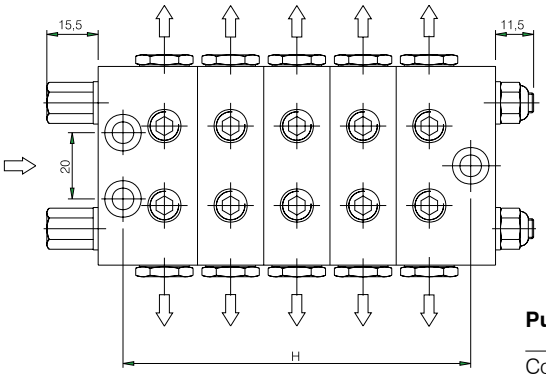

Purchasing codes

Code	Reference	No. of sections	H	L
5184	02.800.3	3	65	80
5185	02.800.4	4	85	100
5186	02.800.5	5	105	120
5187	02.800.6	6	125	140
5188	02.800.7	7	145	160
5189	02.800.8	8	165	180
5190	02.800.9	9	185	200
5191	02.801.0	10	205	220
5192	02.801.1	11	225	240
5193	02.801.2	12	245	260

Purchasing information:
Please refer to page PRO-47

Progressive Divider Model DPA

Fittings for Divider Model DPA

Divider model DPA inlet thread is M10x1. With the use of adequate fittings, it is possible to connect it to rigid or flexible tubing outside diameter 6, 8 or 10 mm. Lateral outlets thread is M10x1 and its surface is flat. With the use of adequate fittings, it is possible to connect it to rigid or flexible tubing outside diameter 4, 6 or 8 mm.

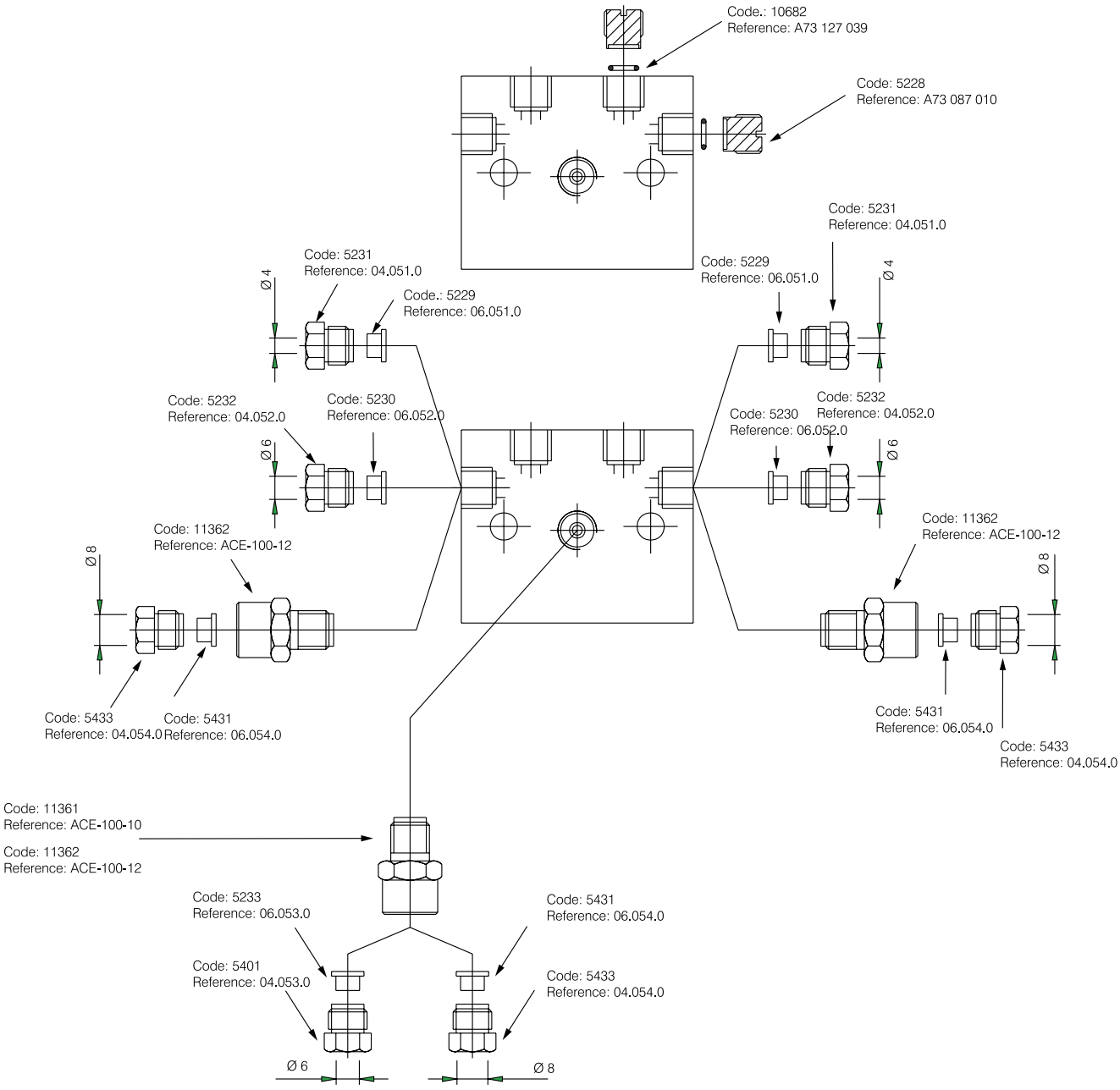

Purchasing information:
Please refer to page PRO-47

Progressive Divider Model DPA

(Continued)

Bridging Connection - Code 09.600.1

These connections are used when it is intended to channelize lubricant in a single outlet distributed among further outlets.

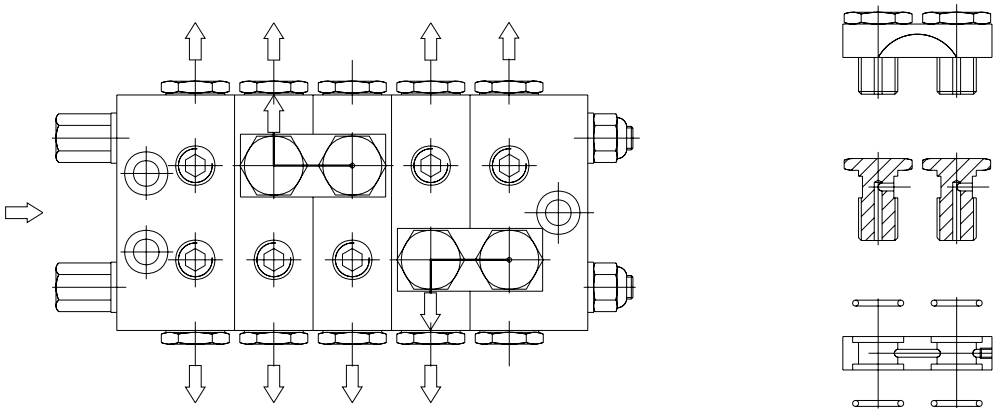

Purchasing codes:
Code: 5226
Reference: 09.600.1

Purchasing information:
Please refer to page PRO-47

Divider
Model DPA With Visible Rod

Description

Visible controlling rods allow visualizing piston displacement and proper operation of the whole system. Normally it is connected to the main divider (master), however, as it may not signalize casual damages to secondary lines, it is recommended, if possible, to install one at all and each secondary divider.

Rod movement is possible due to displacement of metering piston adapted to the rod.

Visible rods may not be used in continuous operation systems.

If that is the case (continuous operation), it is necessary to modify visual control into electrical. It is possible to adapt the body of visual indicator to the electrical control microprocessor housing. When ordering, please specify whether visual control is to be installed at inlet right or left side, by adding to the code of divider letter “D” if to the right side or “E” if to the left side.

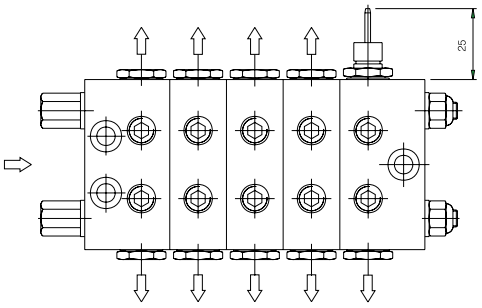

Purchasing information for dividers with visible rod

Code	Reference	Nr. of pistons	Code	Nr. of pistons
5194	02.870.3	3	02.870.8	8
5195	02.870.4	4	02.870.9	9
5196	02.870.5	5	02.871.0	10
5197	02.870.6	6	02.871.1	11
5198	02.870.7	7	02.871.2	12

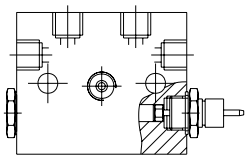

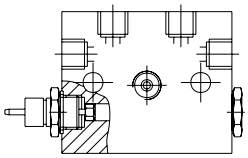

Purchasing information for complete sections with visible rod and 1 or 2 outlets

Flow (mm³)	Initial section		Intermediate section		Final Section	
	Códe	Reference	Code	Reference	Code	Reference
100	11072	02.819.8	5175	02.820.8	11078	02.821.8
150	11073	02.819.9	5176	02.820.9	11079	02.821.9
200	11074	02.820.0	5177	02.821.0	11080	02.822.0
300	11075	02.820.1	5178	02.821.1	11081	02.822.1
400	11076	02.820.2	5179	02.821.2	11082	02.822.2
500	11077	02.820.3	5180	02.821.3	11083	02.822.3

Note: In case of 1 outlet, please consider double flow.

Purchasing information:
Please refer to page PRO-47

Electrical Microswitch for DPA / DPM

Description

Controlling micro contact, also known as end of cycle micro switch, allows sending an electrical signal to check progressive divider operation.

It normally is connected to the divider (master) and monitors supply of lubricant to secondary dividers. In case that it is necessary to monitor the whole system, it is possible to connect a micro contact at each secondary divider.

The visual cycling indicator attached to one piston of the divider generates micro switch activation and deactivation. Each stroke allows exchanging contact status. As it is not possible to establish micro switch start-up position a priori (NO - normally open or NC - normally closed), it is recommended to adjust timer controller function: working time = 20 minutes and controlling time = 30 minutes at the end of which electrical signal issuance should be checked.

It is not recommended to use the electrical signal for shut down the pump, as that shutdown may happen before lubricant may be sent to all points.

Important:

It is understood as complete cycle, a start up with micro switch initial contact in the NO position or NC, exchanging position NC or NO and subsequent return to the original position. In case that the machine does not have controlling electronic device, we may supply a LUB CONTROL controller/timer. Micro contact was designed to be used at lubricating systems that operates in intermittent working mode. It may not be used at systems with continuous working mode (oil circulating systems).

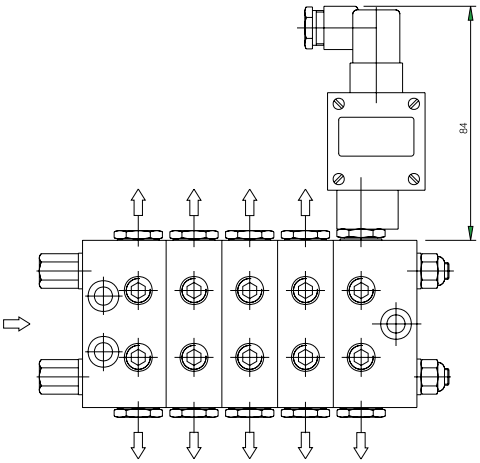

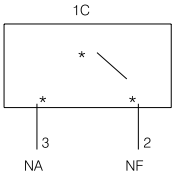

Electrical specifications

Micro contact	5 A - 250 V ac - 30 V dc
Connections	3 p connectors
Protection	IP-55
Temperature	From -5 ºC to +80 ºC

Code: 5224

Reference: 49.050.0

Purchasing information:
Please refer to page PRO-47

Progressive Divider Model DPA

Description

Use of outlets of divider model DPA

Piston of each section of progressive dividers series DPA is designed to feed 1 or 2 outlets.

These sections are normally supplied with an inserted assembly screw/sphere separator and two open outlets. In this case, lubricant flow is done at two outlets. When it is necessary to eliminate one outlet, remove screw/sphere assembly from separator and insert a closing plug in the outlet to be blocked. Note that by doing that procedure, remaining outlet shall then receive double quantity of lubricant.

Example of outlet usage

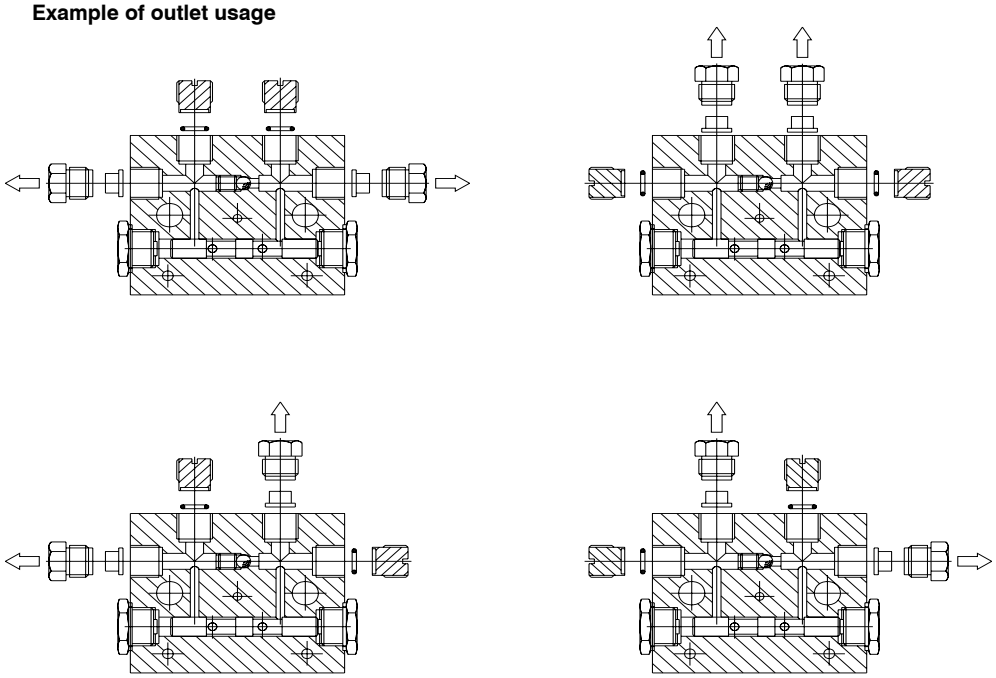

Purchasing information for tie bar

Nº section	A (mm)	Code	Reference
3	94	5238	08.301.1
4	114	5239	08.301.2
5	134	5240	08.301.3
6	154	5241	08.301.4
7	174	5242	08.301.5
8	194	5243	08.301.6
9	214	5244	08.301.7
10	234	5245	08.301.8
11	256	5246	08.301.9
12	276	5247	08.302.0

Purchasing information for sections with 2 outlets

Flow (mm³)	Initial section		Intermediate section		Final section	
	Code.	Reference	Code	Reference	Code	Reference
50	5154	02.810.1	5168	02.811.1	5161	02.812.1
100	5155	02.810.2	5169	02.811.2	5162	02.812.2
150	5156	02.810.3	5170	02.811.3	5163	02.812.3
200	5157	02.810.4	5171	02.811.4	5164	02.812.4
300	5158	02.810.5	5172	02.811.5	5165	02.812.5
400	5159	02.810.6	5173	02.811.6	5166	02.812.6
500	5160	02.810.7	5174	02.811.7	5167	02.812.7

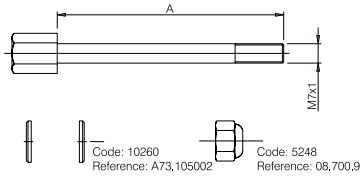

Purchasing information:
Please refer to page PRO-47

(Continue)

Progressive Divider
Model DPA

(Continued)

Examples of utilization of 1 outlet at sections with double flow

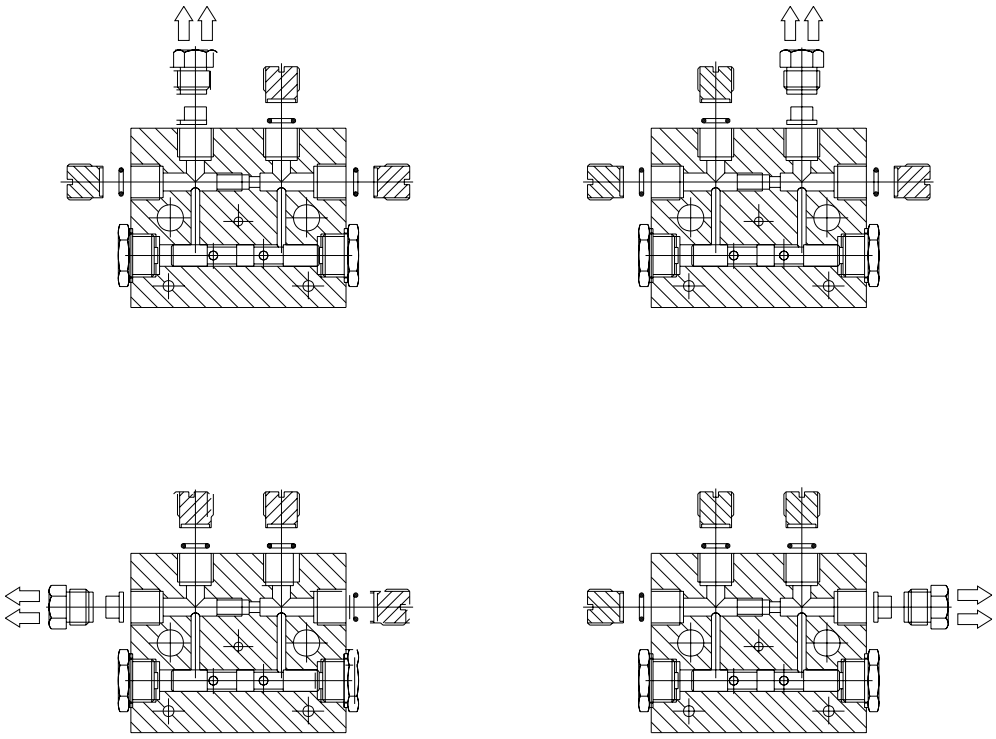

Purchasing information for sections with 1 outlet

Flow (mm³)	Initial section		Intermediate section		Final section	
	Code	Reference	Code	Reference	Code	Reference
100	11072	02.819.8	5175	02.820.8	11078	02.821.8
150	11073	02.819.9	5176	02.820.9	11079	02.821.9
200	11074	02.820.0	5177	02.821.0	11080	02.822.0
300	11075	02.820.1	5178	02.821.1	11081	02.822.1
400	11076	02.820.2	5179	02.821.2	11082	02.822.2
500	11077	02.820.3	5180	02.821.3	11083	02.822.3

Note: In case of 1 outlet, please consider double flow.

Purchasing information:
Please refer to page PRO-47

Performance Indicators for DPA

Indicators With Memory

These indicators are normally used for controlling casual excess pressure at main lines and secondary lines.

When pressure becomes excessive, device is actuated and remains in that position until its return is manually done. It is recommended to do that only after reason and location of failure has been discovered.

Code	Reference	Marking	Minimum Pressure
5252	09.710.2	50	50
5253	09.710.3	75	75
5249	09.710.4	100	100
11085	09.710.5	150	150
5250	09.710.6	200	200
5251	09.710.7	250	250

Application of divider model DPA

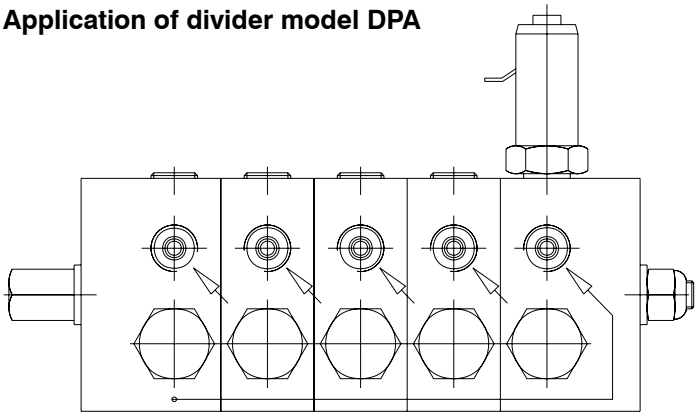

Rod indicator with memory

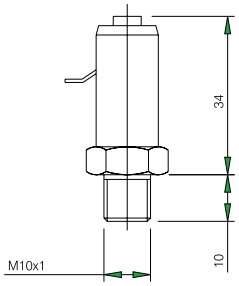

Purchasing information:
Please refer to page PRO-47

Progressive Divider Model DPM and DPA

Use of outlets

Each piston of progressive dividers model DPM and DPA is designed for feeding 1 or 2 outlets. They are normally supplied with two open outlets.

In that case (figure 1), lubricant flow is done at both outlets.

When it is necessary to block one outlet, separator screw/sphere assembly (figure 2) shall be removed and a plug should be placed in the outlet intended to be blocked. Note that by doing this procedure, remaining outlet shall receive double quantity of lubricant.

Important:

It is not possible to block both outlets of same piston. All the work has to be done in an uncluttered environment.

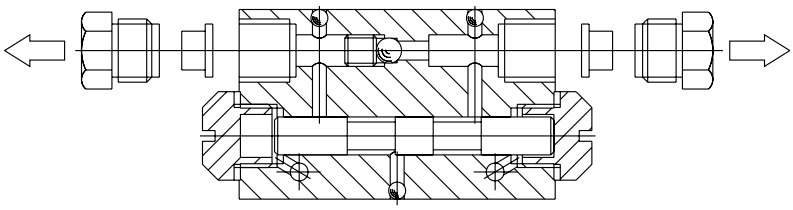

FIG. 1

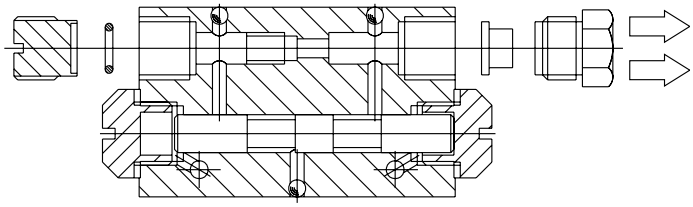

FIG. 2

Progressive Divider Model DPM

Specifications

Discharge/cycle (mm^3)	100 - 150 - 200
Number of pistons	From 3 to 10
Working pressure	From 15 kg/cm^2 to 250 kg/cm^2
Working temperature	From -20 ºC to +100 ºC
Material of divider	Galvanized carbon steel
Number of cycles/minute	Maximum 250
Inlet	1/8" BSP
Outlets	M10x1
Fastening screws	M5x40 (2)
Lubricants	Oil 15 cSt - grease maximum NLGI 2
Controlling elements	Visual and electrical for signalizing cycle and excess pressure
Main pressure lines	Tubing Ø 10-8-6 mm
Secondary lines	Tubing Ø 8-6-4 mm

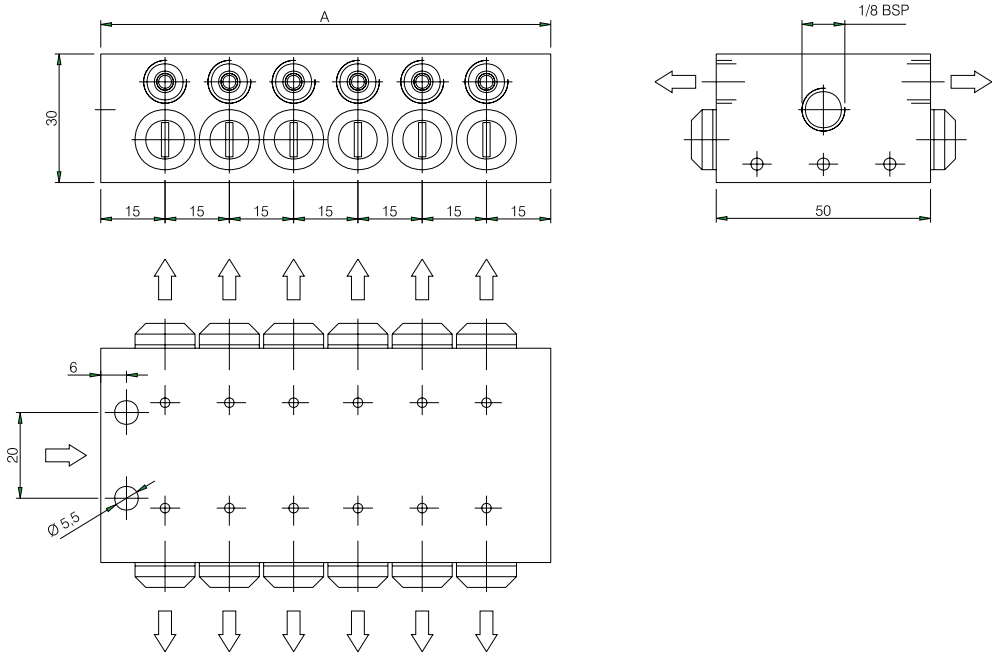

Purchasing information

Code	Reference	Nº of pistons	A	Code	Reference	Nº of pistons	A
5204	02.880.3	3	60	5208	02.880.7	7	120
5205	02.880.4	4	75	5209	02.880.8	8	135
5206	02.880.5	5	90	5210	02.880.9	9	150
5207	02.880.6	6	105	5211	02.881.0	10	165

Purchasing information:
Please refer to page PRO-47

Progressive Divider Model DPM

Fittings for divider model DPM

Inlet thread for divider series DPM is 1/8” BSP and by using adequate fittings, it is possible to connect rigid or flexible tubing with external diameter 6, 8 or 10 mm. Lateral outlet is thread M10x1 with flat surface and by using adequate fittings, it is possible to connect 4 or 6 mm outside diameter tubing.

Inlet connections		For tubing	Outlet connections	
Terminals	03.218.0	10		
Connection	04.056.0	10		
Ring	06.056.0	10		
Terminals	03.214.0	8		
Connection	04.104.0	8		
Ring	06.004.0	8		
Terminals	03.205.0	6		
Connection	04.103.0	6	Connection	04.052.0
Ring	06.053.0	6	Ring	06.052.0
		4	Connection	04.051.0
		4	Ring	06.051.0

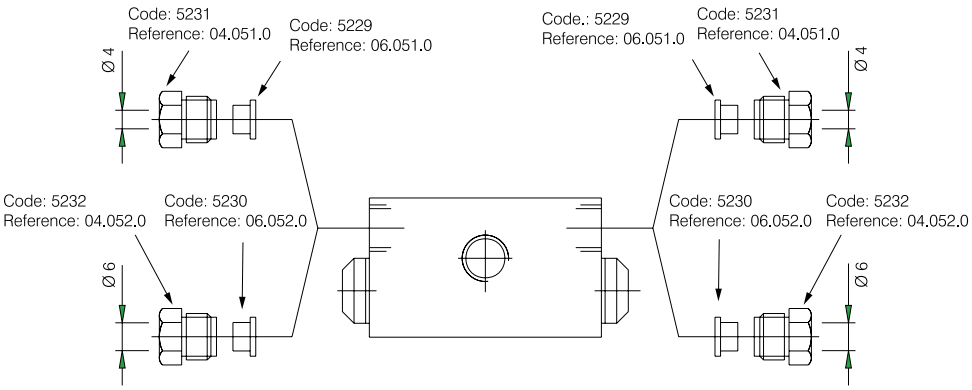

Purchasing information:
Please refer to page PRO-47

Divider
Model DPM With Visible Rod

Description

Visible controlling rods allow visualizing piston displacement and proper operation of the whole system. Normally it is connected to the main divider (master), however, as it may not signalize casual damages to secondary lines, it is recommended, if possible, to install one at all and each secondary divider.

Rod movement is possible due to displacement of metering piston adapted to the rod. Visible rods may not be used in continuous operation systems. If that is the case (continuous operation), it is necessary to modify visual control into electrical. It is possible to adapt the body of visual indicator to the electrical control microprocessor housing.

When ordering, please specify whether visual control is to be installed at inlet right or left side, by adding to the code of divider letter “D” if to the right side or “E” if to the left side.

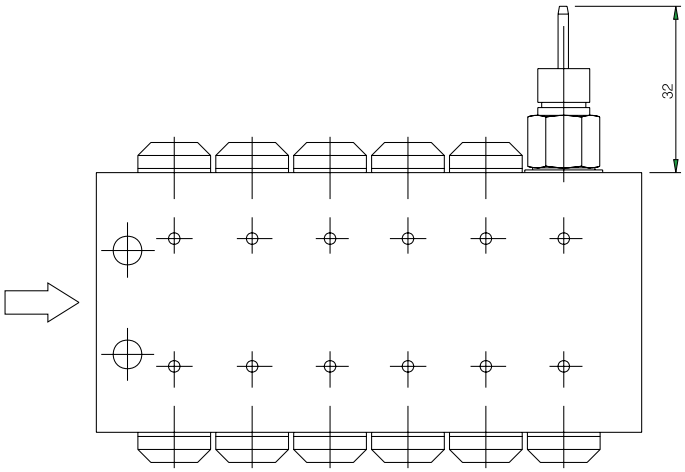

Purchasing codes

Code	Reference	Nº of pistons
5214	02.881.3	3
5215	02.881.4	4
5216	02.881.5	5
5217	02.881.6	6
5218	02.881.7	7
5219	02.881.8	8
5220	02.881.9	9
5221	02.882.0	10

Purchasing information:
Please refer to page PRO-47

SONED®

CENTRALIZED LUBRICATION

Truck Lub®
Automatic Lubrication for Heavy-duty Transportation Vehicle

Description

Assembly of 12 V or 24 V electro pump model BEG 2, equipped with grease pumping elements with relief valve for maximum pressure, progressive dividers with up to 20 outlets in a single piece, with capacity to lubricate up to 60 points of a moving vehicle.

Truck Lub® system lubricates chassis of vehicle while in movement and avoids friction between parts and premature wearing with correct grease metering at the point to be lubricates. System is sealed and pump assembly feeding is by propulsion, which avoids grease contamination. Grease is sent through tubing up to progressive dividers that distribute grease in pre determined and metered quantities.

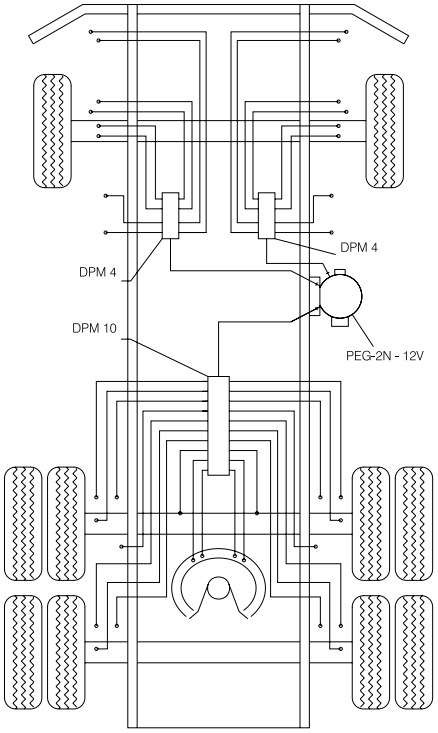

Chassis assembling flow diagram

Applications

- Heavy-duty road transportation vehicles
- Urban and long distance passenger busses
- Long distance hauling
- Urban delivery transportation
- Off-the-road vehicles such as sugar cane transportation, large site of works, wood and ore transportation
- Power shovel, harvest picker, etc

Truck Lub® System is a product approved by the European Community. It is very popular and used due to its low maintenance cost.

Benefits

- Lubricates the vehicle correctly thus saving labor costs
- Reduces wearing at friction points and avoids breaking
- Increases fleet mileage profitability
- Saves grease and avoids wastage
- Does not pollute environment and avoids spilling grease on the road
- Lubricates points of difficult access
- Avoids periodic stoppage for lubrication
- Increases usable life of parts with high profitability

Truck Lub® System is composed by:

- 1 electro pump series BEG-2 (with elements)
- Progressive dividers (according to the number of points of vehicle to be lubricated)
- Time controlling relay with adjustable pre determined timing
- Fastening accessories, nylon 11 tubing, fittings, electrical harness, bushing and protectors
- Truck Lub® System has inside its electro pump a grease mixer to avoid separation of grease oil and thickener and to always keep grease homogenized. This facilitates pumping. Relief outlet is beside reservoir to avoid overfeeding.

DPA and DPM Progressive Dividers
Purchasing information

DPA

1 DPA 3 CM (50D / 100S / 500D)

1) Quantity of dividers
2) Model: DPA
3) Number of sections: 3 to 12
4) CM
   (Please, inform when microswitch [reed] or magnetic indicator is needed.)
5) Flow (50 / 100 / 150 / 200 / 300 / 400 / 500 mm^3), constructive form (D = 2 outlets / S = 1 outlet) and cycle inidicators (E = left / D = right)

   (Please, inform when necessary and inform at which section, except for 50 mm^3 flow)

Note:
Connection bridge and performance indicators

(Please, inform when necessary and inform at which section)

Examples:

1 DPA 3 (50D / 100S / 500D)

2 DPA 3 CM (100D / 200SD / 400S) w/ microswitch (reed)

3 DPA 3 (50D / 150DD / 300S) w/ visible cycle indicator

DPM

1) Quantity of dividers
2) Model: DPM
3) Number of pistons: 3 to 10
4) CM
   (Please, inform when necessay microswitch[reed])
5) Flow (100 / 150 / 200 mm^3), constructive form (D = 2 outlets / S = 1 outlet) and cycle indicator with visible stem (E = left / D = right)

   (Please, inform when necessary and at which piston, except for 50 mm^3 flow)

Note:
Bridge connection

(Please, inform when necessary

and at which piston)

Examples:

1 DPM 3 (100S / 200D / 100S)

2 DPM 3 (100SE / 200S / 150S) w/ visible cycle indicator

1 DPM 3 CM (100D / 100DD / 100S) w/ microswitch (reed)